1437 Washtenaw
Phi Delta Theta House

NOT TO BE APPROPRIATED TO PRIVATE USE
REVISED STATUTES Sec. 5439, March 4, 1909
UNIVERSITY OF MICHIGAN
NAVAL TRAINING UNIT

JOHN C ANDERSON
32 MICHIGAN Hou
375
C6B
2 85

3-b-d
VII -a b
ME-1a
Sat. 8-10

Tg 99 in
chap 6

GOVERNMENT PROPERTY
NOT TO BE APPROPRIATED TO PRIVATE USE
REVISED STATUTES SEC. 5439, March 4, 1909
UNIVERSITY OF MICHIGAN
NAVAL TRAINING UNIT

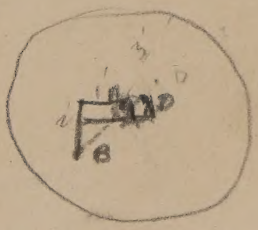

Exam next
Tues

Room 448

ELEMENTS OF MECHANISM

ELEMENTS OF MECHANISM

PETER SCHWAMB, S.B.
Late Professor of Machine Design, Massachusetts Institute of Technology

ALLYNE L. MERRILL, S.B.
Professor Emeritus, Massachusetts Institute of Technology

WALTER H. JAMES, S.B.
Professor Emeritus, Massachusetts Institute of Technology

FIFTH EDITION

NEW YORK
JOHN WILEY & SONS, INC.
LONDON: CHAPMAN & HALL, LIMITED

COPYRIGHT, 1904, 1905,
BY
PETER SCHWAMB
AND
ALLYNE L. MERRILL

COPYRIGHT, 1904, RENEWED, 1931

COPYRIGHT, 1921,
BY
PETER SCHWAMB
ALLYNE L. MERRILL
WALTER H. JAMES

COPYRIGHT, 1930, 1938,
BY
AMY B. SCHWAMB
ALLYNE L. MERRILL
WALTER H. JAMES

All Rights Reserved

Printed in U. S. A. 10–42

PREFACE

A study of the elements of mechanism, as treated in the following pages, is intended primarily to give the student familiarity with, and practise in thinking about, the application of the fundamental principles of kinematics in a specific field, namely, the field of mechanical movements. The purpose is not to describe a large number of different devices, but rather to select the relatively more common and more fundamental machine elements and study their motions when combined in certain definite ways. In the making of a number of such analyses, involving the application of well-known laws of physics and employing both graphical and algebraic methods, the student may be expected to acquire those habits of thought and powers of visualization necessary for the analysis of any mechanical device. He will learn how to approach his task. That is, he will discover that any device, however complicated, can be resolved into groups of the elementary combinations and studied as such. Having achieved this viewpoint he will be prepared to apply his ability to any problem which requires similar habits of thought for its solution.

The first edition of this work was written during 1885 by Professor Peter Schwamb and for many years was used in the form of printed notes at the Massachusetts Institute of Technology.

In 1904 the second edition was published, in the preparation of which Professor Merrill collaborated.

The undersigned joined in the authorship of the third and fourth editions, in 1920 and 1930 respectively, and the responsibility for the present revision has devolved upon him since Professor Merrill has retired from active teaching.

The same general method of treatment has been followed here as in the previous editions. Added emphasis, however, has been given to certain parts of the subject with correspondingly less attention to other parts, in conformity with the present-day requirements in applied mechanics and machine design.

The most important changes are:

1. A more thorough discussion of the general laws of motion with special attention to acceleration.
2. Replacement of some of the old examples by others based on present-day practise.

3. Rearrangement of the order of the chapters in accordance with the suggestions of a number of instructors who are using the book in their classes.
4. Placing all the problems which apply directly to a given chapter at the end of the chapter.

The book is planned to meet the requirements of the average course of about forty-five class hours accompanied by seventy-five to ninety hours of outside work and study. It is believed that the material is so arranged that the amount of time spent on the various subdivisions may be varied to meet the needs of different groups of students.

Frequent use is made of the simpler methods of the calculus but classes which have not studied calculus may omit most of these sections without destroying the continuity of the work.

Acknowledgment is made of the many valuable criticisms and suggestions given by professors in all parts of the country who have used the previous edition. Although it has not been possible to conform to all the suggestions offered, because of their varying character, all have been of great help. Especial mention should be made of assistance given by Professor Alvin Sloane of Massachusetts Institute of Technology, who has prepared the copy for most of the new illustrations and reviewed much of the manuscript.

WALTER H. JAMES

Cambridge, Mass., 1938

CONTENTS

PAGE

CHAPTER I

Introduction 1

CHAPTER II

Motion 13

CHAPTER III

Vectors 33

CHAPTER IV

Velocity Analysis 41

CHAPTER V

Acceleration Analysis 71

CHAPTER VI

Linkages 90

CHAPTER VII

Transmission of Motion by Direct Contact 142

CHAPTER VIII

Bodies in Pure Rolling Contact 154

CHAPTER IX

Gears and Gear Teeth 175

CHAPTER X

Wheels in Trains 231

CHAPTER XI

Cams 267

CHAPTER XII

Inclined Plane, Wedge, Screw 304

CHAPTER XIII

Belts, Ropes, and Chains 322

CHAPTER XIV

Miscellaneous Mechanisms 361

Index 393

NOTATION AND SYMBOLS

Wherever a subscript occurs it indicates the particle, point, line, or body which is under consideration. Superior letters are descriptive.

t = time

s = distance moved.

v = velocity or speed.

v_0 = velocity when $t = 0$.

v_B = velocity of point B.

v_B^C = velocity of B relative to C.

a = linear acceleration.

θ = angle turned through.

ω = angular speed in radians.

ω_0 = angular speed when $t = 0$.

ω_{AB} = angular speed of line AB.

ω_{AB}^{CD} = angular speed of AB relative to CD.

α = angular acceleration in radians.

a_B^{TC} = tangential acceleration of B relative to C.

a_B^{NC} = normal acceleration of B relative to C.

E_C^f = that point on body f which has the same velocity as the point C on another body.

$\overrightarrow{+}$ = vector sum.

$\overrightarrow{-}$ = vector difference.

I_k = instantaneous axis of velocities of body k relative to the fixed body.

I_{kf} = instantaneous axis of velocities of k relative to f, or of f relative to k.

fixed axis.

or any specified point.

pin joint at end of a rigid piece.

pin joint at point other than end of a rigid piece.

or sliding pair.

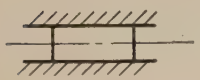 fixed guides.

Bent rocker or two cranks turning together on fixed axis.

Bent rocker turning on a movable axis.

ELEMENTS OF MECHANISM

CHAPTER I

INTRODUCTION

1–1. The Science of Mechanism treats of the laws governing the motion of the parts of a machine and the forces transmitted by these parts.

In designing a machine, or in studying the design of an existing machine, two distinct but closely related divisions of the problem present themselves. First, the machine parts must be so proportioned and so related to one another that each has the proper motion. Second, each part must be adapted to withstand the stresses imposed upon it. The nature of the movements does not depend upon the strength or absolute dimensions of the moving parts. This can be shown by models whose dimensions may vary much from those requisite for strength, and yet the motions of the parts will be the same as those in the machine. Therefore, the force and the motion may be considered separately, thus dividing the science of mechanism into two parts:

1. *Pure Mechanism* or *Geometry of Machinery*, which treats of the motion and forms of the parts of a machine, and the manner of supporting and guiding them, independent of their strength.

2. *Constructive Mechanism*, which involves the calculation of the forces acting on different parts of the machine; the selection of materials as to strength, durability, and other physical properties in order to withstand these forces, taking into account the convenience for repairs and facilities for manufacture.

1–2. Kinematics of Machines is a name commonly applied to that branch of the science of mechanism referred to in the preceding article as *pure mechanism* or *geometry of machinery*. It is the term which will be used in the following text, while the word *mechanism* will have the specific meaning given to it in § 1–6.

1–3. A Particle is an infinitesimal part of a body or of matter. It may be represented on a drawing by a point and is often referred to as a *point*. A line on a body may be thought of as a series of contiguous particles arranged in a line.

1–4. A Rigid Body is one whose component particles remain at a constant distance from one another. That is, the body is assumed not to suffer any distortion by the forces which may act on it.

For the purpose of kinematic study a line may be considered as being of indefinite length and a body of indefinite magnitude. For example, in analyzing the motion of a body it may be necessary to consider the motion of a point which is a part of that body but beyond the limits of the actual body. Such a point on the extension of a body must have all the properties common to other points on the same body.

1–5. A Machine is a combination of resistant bodies so arranged that by their means the mechanical forces of nature can be compelled to produce some effect or work accompanied with certain determinate motions.* In general, it may properly be said that a machine is an assemblage of parts interposed between the source of power and the work, for the purpose of adapting the one to the other. Each of the pieces in a machine either moves or helps to guide some of the other pieces in their motion. Still another definition is as follows:

A machine is an assemblage of parts so connected that when the first, or recipient, has a certain motion, the parts where the work is done, or effect produced, will have certain other definite motions.

No machine can move itself, nor can it create motive power; this must be derived from external sources. As an example of a machine commonly encountered, an engine might be mentioned. It is able to do certain definite work, provided some external force acts upon it, setting the parts in motion. It consists of a fixed frame, supporting the moving parts, some of which cause the rotation of the engine shaft, others move the valves distributing the fluid to the cylinder, and still others have other functions. These moving parts are so arranged that they have certain definite motions relative to one another when an external force is applied to the piston.

1–6. A Mechanism is a portion of a machine where two or more pieces are combined, so that the motion of the first compels the motion of the others, according to a law depending on the nature of the combination. For example, the combination of a crank and connecting rod with guides and frame, in a steam engine, serving to convert reciprocating into circular motion, would thus be called a mechanism.

The term **elementary combination** is sometimes used synonymously with **a mechanism.**

A machine is made up of a series or train of mechanisms.

1–7. Frame. The frame of a machine is a structure that supports the moving parts and regulates the path, or kind of motion, of many of

* Reuleaux, " Kinematics of Machinery."

them directly. In discussing the motions of the moving parts, it is convenient to refer them to the frame, even though it may have, as in the locomotive, a motion of its own.

1–8. Driver and Follower. That piece of a mechanism which causes motion is called the driver, and the one whose motion is effected is called the follower.

1–9. Modes of Transmission. If the action of natural forces of attraction and repulsion is not considered, one piece cannot move another unless the two are in contact or are connected to each other by some intervening body that is capable of communicating the motion of the one to the other.

Thus motion can be transmitted from driver to follower:

1. By direct contact. { Sliding. / Rolling.
2. By intermediate connectors. { Rigid. / Flexible. / Fluid.

If an intermediate connector is rigid it is called a **link,** and it can either push or pull, as the connecting rod of a steam engine. Pivots or other joints are necessary to connect the link to the driver and follower.

If the connector is flexible, it is called a **band,** which is supposed to be inextensible, and capable only of transmitting a pull. A fluid confined in a suitable receptacle may also serve as a connector, as in the hydraulic press. The fluid might be called a pressure organ in distinction from the band, which is a tension organ.

1–10. Pairs of Elements. In order that a moving body, as A, Fig. 1–1, may remain continually in contact with another body, B, and at the same time move in a definite path, B would have a shape which could be found by allowing A to occupy a series of consecutive positions relative to B, and drawing the envelope of all these positions. Thus, if A were of the form shown in the figure, the form of B would be that of a curved channel. Therefore, in order to compel a body to move in a definite path, it must be paired with another, the shape of which is determined by the nature of the relative motion of the two bodies.

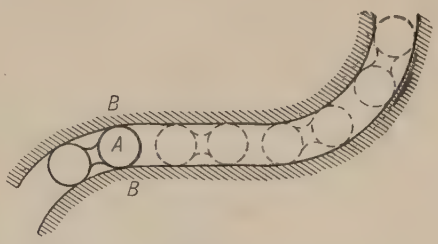

FIG. 1–1

1–11. Closed or Lower Pair. If one element not only forms the envelope of the other, but also encloses it, the forms of the elements

being geometrically identical, the one being solid or full, and the other being hollow or open, we have what may be called a **closed pair,** also called a **lower pair.** In such a pair, *surface contact exists between the two members.*

On the surfaces of two bodies forming a closed pair, coincident lines may be supposed to be drawn, one on each surface; and if these lines are of such form as to allow them to move along each other, that is, allow a certain motion of the two bodies paired, three forms only can exist:

1. A straight line, which allows straight translation, Fig. 1–2.
2. A circle, which allows rotation, or revolution, Figs. 1–3 and 1–4.
3. A helix, which allows a combination of rotation and straight translation, Fig. 1–5.

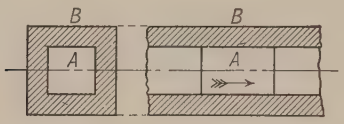

Fig. 1–2

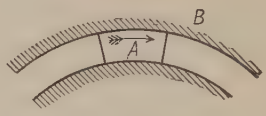

Fig. 1–3

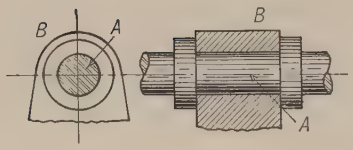

Fig. 1–4

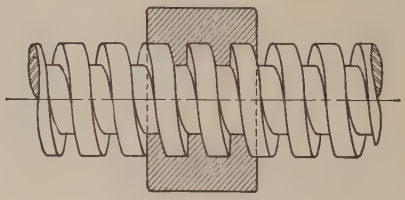

Fig. 1–5

1–12. Higher Pairs. The pair represented in Fig. 1–1 is not closed, as the elementary bodies A and B do not enclose each other in the above sense. Such a pair is called a **higher pair,** and the *contact between the elements is along lines only.*

1–13. Incomplete Pairs of Elements. Hitherto it has been assumed that the reciprocal restraint of two elements forming a pair was complete, i.e., that each of the two bodies, by the rigidity of its material and the form given to it, restrained the other. In certain cases it is only necessary to prevent forces having a certain definite direction from affecting the pair, and then it is no longer absolutely necessary to make the pair complete; one element can be cut away where it is not needed to resist the forces.

The bearings for railway axles, the steps for water-wheel shafts, the ways of a planer, railway wheels kept in contact with the rails by the

force of gravity are all examples of incomplete pairs in which the elements are kept in contact by external forces.

1–14. Inversion of Pairs. In Fig. 1–2 if B is the fixed piece all points on A move in straight lines. If A were the fixed piece all points in B would move in straight lines. That is, the absolute motion of the moving piece is the same, whichever piece is fixed. The same statement holds true of the pairs shown in Figs. 1–3, 1–4, and 1–5.

This exchange of the fixedness of an element with its partner is called **the inversion of the pair,** and *in any closed or lower pair it does not affect either the absolute or the relative motion.*

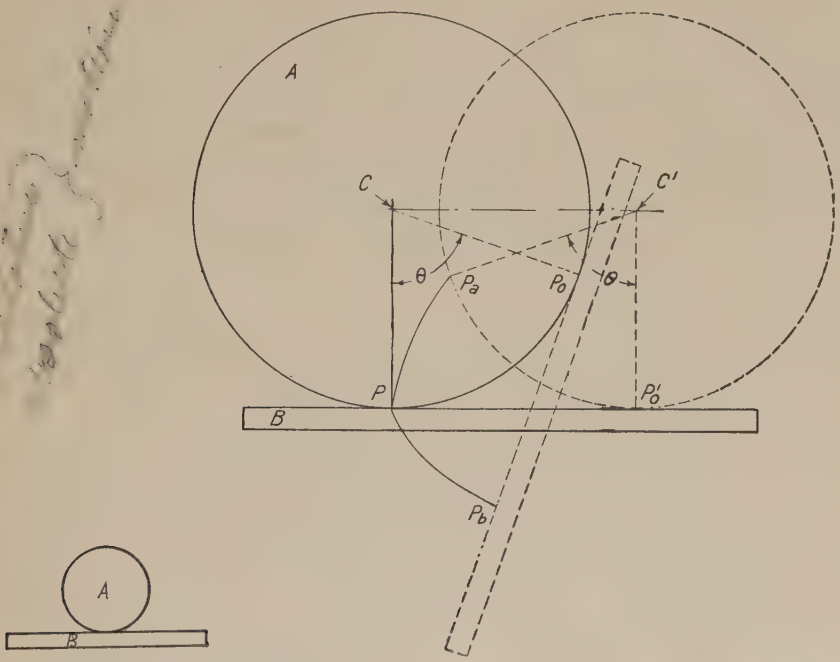

Fig. 1–7

Fig. 1–6

In the pairs shown in Figs. 1–1 and 1–6, both of which are higher pairs, *the relative motion of A and B is the same when A is fixed as when B is fixed. The absolute motion of A when B is fixed is not the same as the absolute motion of B when A is fixed.*

This is illustrated in Fig. 1–7, which is the same mechanism as Fig. 1–6. A point on A is in contact with a point on B at P. Roll A along B until its center C comes to C^1, then the radius CP_0 will be at $C^1P_0{}^1$ and the point on A which was at P will be at P_a, having followed the cycloidal path PP_a. Now restore A to its original position and roll

B around A until it is tangent to A at P_0. Then the point on B which was at P will be at P_b, having followed the involute path PP_b. The straight-line distances of P_a and P_b from P are equal although the two curves described by the points as they move are different. That is, the position of one piece relative to the other at the end of the motion is the same regardless of which piece has moved, while the absolute motion of a point on one piece as it moves is different from the absolute motion of a point on the other piece when it moves. This same principle shows itself in another and a very important way. Let the piece B be fixed and A roll on it as before described. Suppose a piece of stiff paper to be attached to A, extending beyond it and moving as a part of A. Then a pencil point fast to B at P will draw on the paper an involute which is an exact duplicate of the curve PP_b, previously described.

1–15. Bearings. The word **bearing** is applied, in general, to the surfaces of contact between two pieces which have relative motion, one of which supports or partially supports the other. One of the pieces may be stationary, in which case the bearing may be called a **stationary bearing;** or both pieces may be moving.

Bearings may be arranged, according to the relative motions they will allow, in three classes:

1. For straight translation the bearings must have plane or cylindrical surfaces, cylindrical being understood in its most general sense. If one piece is fixed the surfaces of the moving pieces are called **slides;** those of the fixed pieces, **slides** or **guides.**

2. For rotation, or turning, the bearings must have surfaces of revolution, as circular cylinders, cones, conoids, or flat disks. The surface of the solid or full piece is called a **journal, neck, spindle,** or **pivot;** that of the hollow or open piece, a **bearing, gudgeon, pedestal, plumber-block, pillow-block, bush,** or **step.**

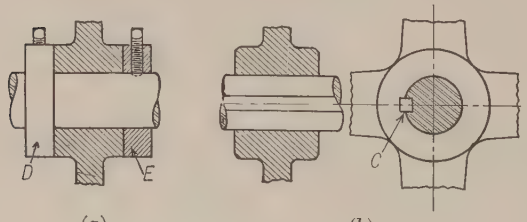

FIG. 1–8

3. For translation and rotation combined (helical motion), they must have a helical or screw shape. Here the full piece is called a **screw** and the open piece a **nut.**

1–16. Collars and Keys. It is very often required that pulleys or wheels turn freely on their cylindrical shafts and at the same time have no motion along them. For this purpose, **rings** or **collars** (Fig. 1–8a) are used; the collars D and E, held by set screws, prevent the motion of the pulley along the shaft but allow it free rotation.

Sometimes pulleys or couplings must be free to slide along their shafts, but at the same time must turn with them; they must then be changed to a sliding pair. This is often done by fitting to the shaft and pulley or sliding piece a key C (Fig. 1–8*b*), parallel to the axis of the shaft. The key may be made fast to either piece, the other having a groove in which it can slide freely. The above arrangement is very common, and is called a **feather and groove,** or **spline,** or a **key and keyway.**

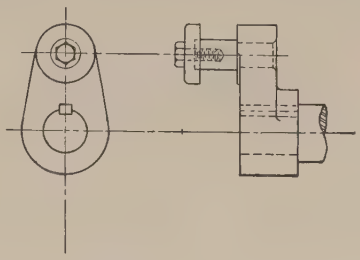

FIG. 1–9

1–17. Cranks and Levers. A crank may be defined in a general way as an arm rotating or oscillating about an axis. (See Fig. 1–9.) When two cranks on the same axis are rigidly connected to each other the name **lever** is often applied to the combination, particularly when the motion is oscillating over a relatively small angle.

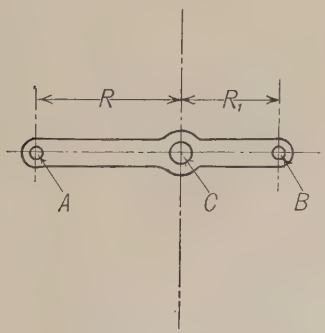

FIG. 1–10

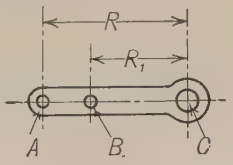

FIG. 1–11

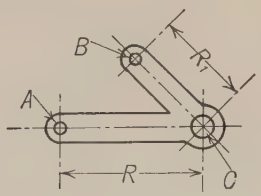

FIG. 1–12

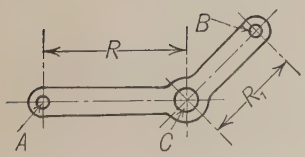

FIG. 1–13

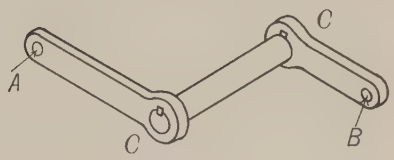

FIG. 1–14

The two arms of a lever may make any angle with each other from 180° as in Fig. 1–10 down to 0° as in Fig. 1–11. When the angle between the two arms is less than 90° as in Figs. 1–11 and 1–12 it is often called a **bell crank lever,** and when the angle is more than 90°

as in Figs. 1–10 and 1–13 it is often called a **rocker.** These terms, however, are used rather loosely and somewhat interchangeably. The two lever arms may be in the same plane as in Figs. 1–10 to 1–13, or they may be attached to the same shaft but lie in different planes as in Fig. 1–14.

1–18. Action of a Crank. A crank may be considered as a rigid piece connecting one member of a pair of cylindrical elements to one member of another pair. The axis of one pair is assumed to be stationary, and the axis of the other pair is constrained by the crank to move in a circular path about the stationary axis. Referring to Fig. 1–15, let the piece g

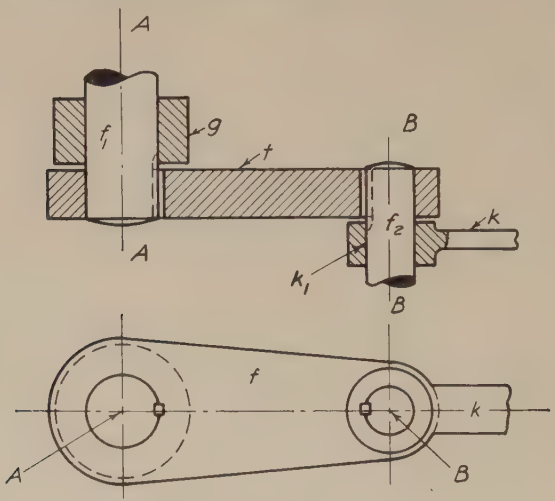

Fig. 1–15

be a fixed bearing containing a cylindrical hole in which the shaft f_1 may turn; f_1 is prevented from moving in the direction of its axis by collars not shown in the figure. g and f_1 therefore constitute a cylindrical pair of elements similar to that in Fig. 1–4. The axis of this pair is A–A. f_1 is keyed or otherwise rigidly fastened to the crank f. At the other end of f is a second pair f_2k_1 with axis B–B. If any motion is imparted to f all points on it must remain at constant distances from A and therefore must move in circular paths about A. The axis B of the pair f_2k_1 is a part of f and therefore must move in a circle about A. The axis B is common to k_1 and f_2, therefore k_1 must have motion of turning about A and it may also have turning about B. That is, the crank f constrains k_1 to turn about A but does not determine its turning about B.

1–19. The Four-Bar Linkage consists of two cranks f and h, Fig. 1–16, having their stationary pair-members g_1 and g_2 attached to, or a part of,

a stationary piece g, and the moving pair-members k_1 and k_2 connected to each other by a rigid rod or bar k called the connecting rod or coupler. k_1 is now constrained to move about A as explained in § 1–18 and k_2 about D, and the rigid connection k between k_1 and k_2 controls the

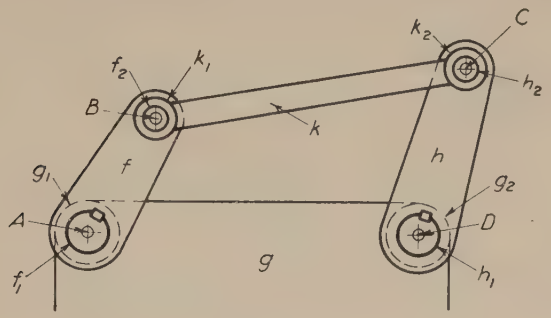

Fig. 1–16

turning of each about its own axis (B and C respectively). Hence if any motion is given to any part of this combination every other part must have a corresponding determinate motion, and the combination constitutes a mechanism. (See § 1–6.)

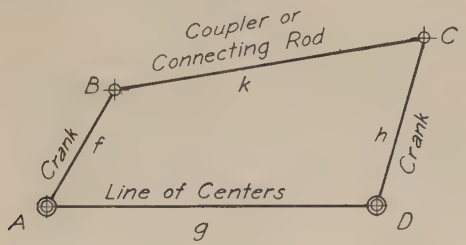

Fig. 1–17

Any of the four pairs might be inverted. (See § 1–14.) That is, the shaft f_1 or h_1 might be held firmly in the bearing and the crank turn on it, or the pin f_2 or h_2 might be attached firmly to k. The four pieces g, f, k, and h are called **links.**

The essential part of a link, from a kinematic standpoint, is its center line, and it is convenient, in studying a linkage, to represent it by the center lines of its links, that is, the lines connecting the axes of the four pairs of elements. Fig. 1-17 represents the linkage shown in Fig. 1–16.

Any mechanism may be resolved into an elementary four-bar linkage, or a combination of such linkages, and its action analyzed in accordance with the laws which, in a later chapter, will be shown to apply to the motions of the members of a four-bar linkage.

1–20. Four-Bar Linkage with a Sliding Member. In Fig. 1–18, the end of the connecting rod carries a block, pivoted to it at the axis C, which slides back and forth in the circular slot as the crank AB revolves. The center of curvature of the slot is at D. The center of the crank pin C

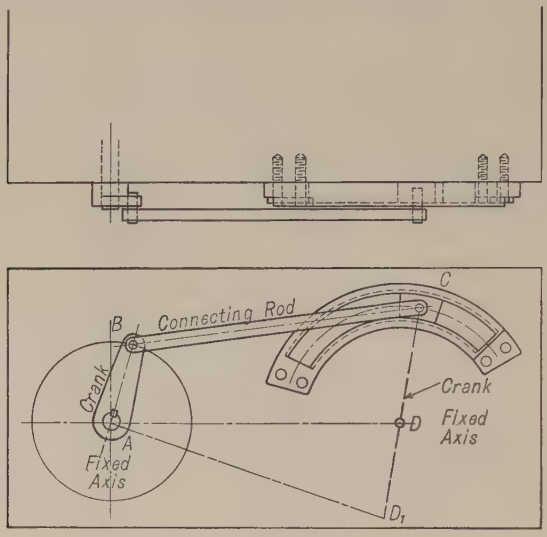

Fig. 1–18

evidently has the same motion that it would have were it guided by a crank of length DC turning about D. The mechanism, therefore, is really a four-bar linkage with the lines AB and DC as center lines of the cranks, AD as the line of centers, and BC as the center line of the connecting rod.

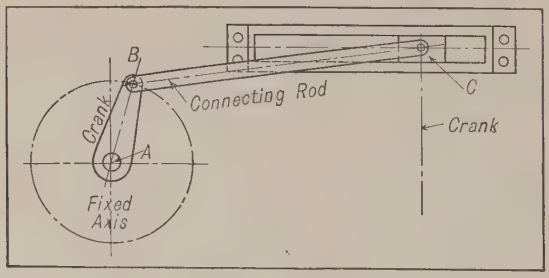

Fig. 1–19

Let it now be supposed that the slot is made of greater radius than that shown in the figure, for example, with its center at D_1. Then the equivalent four-bar linkage would be $ABCD_1$.

Carrying the same idea still further, let the slot be made straight. Then the equivalent center D would be at a point an infinite distance away. The mechanism, however, would still be the equivalent of a four-bar linkage, as shown in Fig. 1–19, where AB is one crank, the line through C perpendicular to the slot is the other crank, BC the connecting rod, and a line through A parallel to the crank through C is the line of centers.

Fig. 1–20 shows the special form in which this linkage commonly occurs, where the center line of the slot passes through the center of the

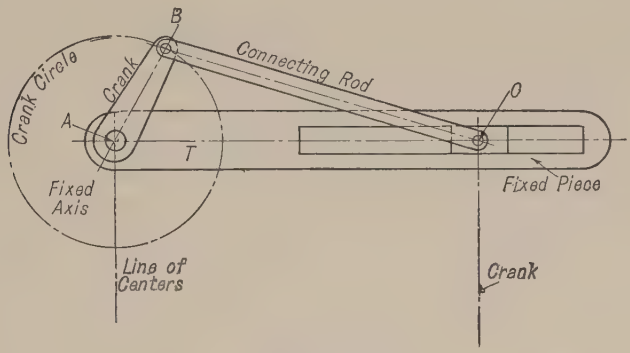

Fig. 1–20

shaft A. This is the mechanism formed by the crank shaft, crank, connecting rod, crosshead, and crosshead guides of the reciprocating steam engine, or the crank, connecting rod, piston, and cylinder of an automobile engine.

PROBLEMS

I–1. Axes A and D are fixed. $AB = 1\frac{1}{2}$ in., $BC = 3$ in., $DC = 2$ in., $AD = 3$ in. Crank f is the driver turning left handed. The proportions are such that while f

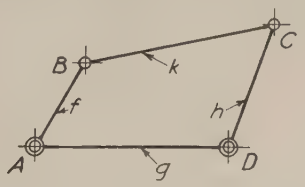

Prob. I–1

makes a complete revolution h oscillates through a certain angle. Find graphically the two extreme positions of the center line DC of the crank h.

Note. Bear in mind that B moves in a circle about A, C moves in a circle about D, and C must always be 3 in. from B.

I–2. Axes A and D are fixed. $AB = 1\frac{1}{2}$ in., $DC = 2$ in., $AD = 3$ in. BC is of such a length that when the driving crank f is 30° above AD the driven crank h

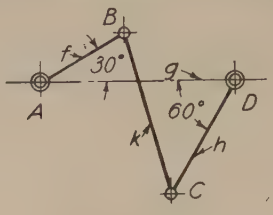

PROB. I–2

is 60° below AD as shown. Find the length of BC and the two extreme positions of the center line DC of crank h.

Solve graphically.

I–3. Block m slides in the slot in the fixed piece g. Axis A of crank f is fixed on g. $AB = 1\frac{1}{2}$ in., $BC = 4\frac{1}{2}$ in. Draw the mechanism full size, assuming dimen-

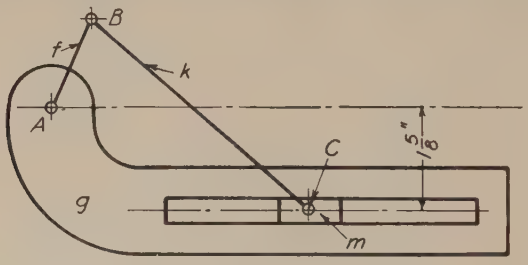

PROB. I–3

sions for g if desired or else use center lines only. Draw in the two lines which represent the infinitely long links, and letter on the drawing the name of each of the four links.

Find graphically the two extreme positions of C, the axis of the pin by which the link k is attached to the block m. Dimension the length of the *stroke* of C, that is the distance between its two extreme positions.

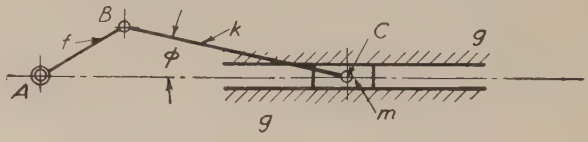

PROB. I–4

I–4. A is a fixed axis. gg are fixed guides for the sliding block m. If the stroke (that is, the length of path) of C is 4 in., what is the length of AB? Find the length BC if the maximum value of the angle ϕ is 30°.

CHAPTER II

MOTION

2–1. Motion is change of position. Motion and rest are necessarily relative terms within the limits of our knowledge. We may conceive a body as fixed in space, but we cannot know that there is one so fixed. If two bodies, both moving in space, remain in the same position relative to each other, they are said to be at rest, one relatively to the other; if they do not, either may be said to be in motion relative to the other.

Motion may thus be either *relative*, or it may be *absolute*, provided some point is assumed as fixed. Ordinarily the earth is assumed to be at rest and motions referred to it are considered as absolute.

2–2. Path. A point moving in space describes a line called its path, which may be *rectilinear* or *curvilinear*. The motion of a body is determined by the paths of three of its points not on a straight line. If the motion is in a plane, two points suffice, and if rectilinear, one point suffices, to determine the motion.

2–3. Direction and Sense. If a point is moving along a straight path the direction of its motion is along the line which constitutes its path; motion towards one end of the line being assumed as having positive direction and indicated by a + sign, the motion toward the other end would be negative and indicated by a − sign. Often this is referred to as the **sense** of the motion. For example, if a point moves along a straight line CD from a point A toward a point B, the *direction* of the motion is that of the line CD while the *sense* of the motion is from A toward B, or simply, AB. If a point is moving along a curved path, the direction at any instant is along the tangent to the curve and may be indicated as positive or negative, or the sense given, as for rectilinear motion.

2–4. Continuous Motion. When a point continues to move indefinitely in a given path in the same sense, its motion is said to be continuous. In this case the path must return on itself, as a circle or other closed curve. A wheel turning on its bearings affords an example of this motion.

2–5. Reciprocating Motion. When a point traverses the same path and reverses its motion at the ends of such path, the motion is said to be *reciprocating*.

2–6. Oscillation is a term applied to reciprocating circular motion, as that of a pendulum.

2–7. Intermittent Motion. When the motion of a point is interrupted by periods of rest, its motion is said to be *intermittent.*

2–8. Revolution and Rotation. A point is said to revolve about an axis when it describes a circle of which the center is in the axis and of which the plane is perpendicular to that axis. When all the points of a body thus move, the body is said to revolve about the axis. If this axis passes through the body, as in a wheel, the word rotation is used synonymously with revolution. The word turn is often used synonymously with revolution and rotation. It frequently occurs that a body not only rotates about an axis passing through itself, but also moves in an orbit about another axis.

2–9. An Axis of Rotation or Revolution is a line whose direction is not changed by the rotation; a *fixed axis* is one whose position, as well as its direction, remains unchanged.

2–10. A Plane of Rotation or Revolution is a plane perpendicular to the axis of rotation or revolution.

2–11. Direction of Rotation or Revolution is defined by giving the direction of the axis, and the **sense** is given by stating whether the turning is *right handed* (clockwise) or *left handed* (anti-clockwise), when viewed from a specified side of the plane of motion.

2–12. Coplanar Motion. A body, or a series of bodies, may be said to have coplanar motion when all their component particles are moving in the same plane or in parallel planes.

2–13. Cycle of Motions. When a mechanism is set in motion and its parts go through a series of movements which are repeated over and over, the relations between and order of the different divisions of the series being the same for each repetition, one of these series is called a **cycle of motions.** For example, one revolution of the crank of a gasoline engine causes a series of different positions of the piston rod, and this series of positions is repeated over and over for each revolution of the crank.

2–14. Period of Motion is the time occupied in completing one cycle.

2–15. Linear Speed is the time rate of motion of a point along its path, or the rate at which a point is approaching or receding from another point in its path. If the point to which the motion of the moving point is referred is fixed, the speed is the *absolute* speed of the point. If the reference point is itself in motion the speed of the point in question is *relative.* Linear speed is expressed in linear units, per unit of time.

2–16. Angular Speed is the time rate of turning of a body about an axis, or the rate at which a line on a revolving body is changing direction, and is expressed in angular units per unit of time.

If a body is revolving about an axis, any point in the body has only linear speed, but a line, real or imaginary, joining the point to the axis of revolution has angular speed; also a line joining any two points on the body has angular speed.

2–17. Uniform and Variable Speed. Speed is *uniform* when equal spaces are passed over in equal times, however small the intervals into which the time is divided. The speed in this case is the space passed over in a unit of time, and if s represents the space passed over in the time t, the speed v will be

$$v = \frac{s}{t} \tag{1}$$

Speed is *variable* when unequal spaces are passed over in equal intervals of time. The speed, when variable, is the limit of the ratio of the space passed over in a small interval of time, to the time, when these intervals of time become infinitely small. If s represents the space passed over in the time t, then

$$v = \text{Limit of } \frac{\Delta s}{\Delta t} \text{ as } \Delta t \text{ approaches zero}$$

or

$$v = \frac{ds}{dt} \tag{2}$$

2–18. Velocity is a word often used synonymously with speed. This is incorrect, since velocity includes direction and sense as well as speed. The linear velocity of a point is not fully defined unless the direction and sense in which it is moving and the rate at which it is moving are known. The angular velocity of a line would be defined by stating its angular speed, the direction of the perpendicular to the plane in which the line is turning, and the sense of the motion.

2–19. Linear Acceleration is the time rate of change of linear velocity. Since velocity involves direction as well as rate of motion, linear acceleration may involve a change in speed or direction, or both. Any change in the speed takes place in a direction tangent to the path of the point and is called **tangential acceleration**; a change in direction takes place normal to the path and is called **normal acceleration**. Acceleration may be either positive or negative. If the speed is increasing the acceleration is positive; if the speed is decreasing the acceleration is negative. If the speed changes by the same amount during all equal time intervals the acceleration is uniform, but if the speed changes by

different amounts during equal intervals of time the acceleration is variable. If Δv represents the change in speed in the time Δt, then

$$a = \frac{\Delta v}{\Delta t}$$

If the acceleration a is uniform

$$a = \frac{v}{t} \tag{3}$$

When the acceleration is variable

$$a = \text{Limit of } \frac{\Delta v}{\Delta t} \text{ as } \Delta t \text{ approaches zero}$$

or

$$a = \frac{dv}{dt} \tag{4}$$

2–20. Angular Acceleration is the time rate of change of angular velocity. As in linear acceleration, a change in either speed or direction of rotation, or both, may be involved. For example, if a line is turning in a plane with a varying angular speed it has angular acceleration which may be positive or negative; or if the direction of the plane of rotation is changing the line also has angular acceleration. Unless otherwise stated, angular acceleration in this book will be understood to refer to change in angular speed. Angular acceleration is expressed in angular units change of speed per unit time (such as radians, degrees, or revolutions per minute each minute). Equations (3) and (4) will apply to angular acceleration if for a and v the corresponding angular units α and ω are substituted.

2–21. Translation. A body is said to have motion of translation when all its component particles have the same velocity, both as regards speed and direction. That is, all points on the body are, for the instant at least, moving in the same direction with equal speeds. If the particles all move in straight lines the body has **rectilinear translation,** and if they move in curved paths the body has **curvilinear translation.**

2–22. Turning Bodies. All motion consists of translation, turning about an axis, or a combination of the two. For this reason it is desirable, before proceeding further, to consider in greater detail some of the laws applying to turning bodies. It is customary to refer to motion of turning as revolving or rotating. These terms are used more or less interchangeably although sometimes a distinction is made. (See § 2–8.)

2–23. Angular Speed. Given a circular cylinder or wheel supported on a shaft which in turn is supported in fixed bearings. The wheel may be made fast to the shaft and the two turn as a unit as in Fig. 2–1, or the shaft may be held stationary and the wheel turn on it as in Fig. 2–2. The speed at which the wheel turns is the rate at which any line

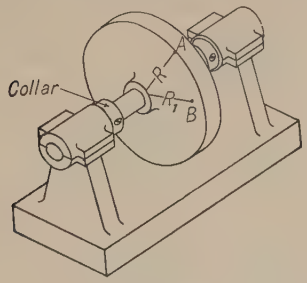

FIG. 2–1

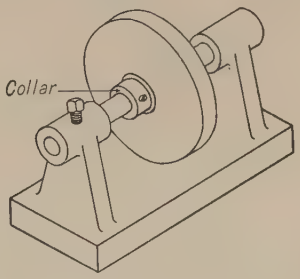

FIG. 2–2

on it (radial or otherwise) changes direction. If the wheel makes N complete turns in one minute its angular speed is N revolutions per minute (written N rpm).

In many computations it is necessary to use as a unit of angular motion the **radian,** which is the angle subtended by the arc of a circle equal in length to its radius. Since the radius is contained in the circumference 2π times there must be 2π radians in 360°, or one radian is equal to 57° 17′ 42″.

Hence

$$1 \textit{ Revolution} = 2\pi \textit{ radians}$$

If N represents the angular speed in revolutions per unit of time and ω the angular speed in radians then

$$\omega = 2\pi N \qquad (5)$$

Referring to Fig. 2–3, let the body M be rigidly attached to an arm which is turning around the axis C, the arm and M revolving together. Then the lines CA and CB which join any two points A and B to the axis have angular speed about C, and since the entire body is rigid and the angle ACB is constant, CA and CB each have the same angular speed as the arm. Moreover, since, as the body revolves, the line AB constantly changes direction, it may also be said to have angular speed, which, in this case, is the same as that of the lines CA and CB.

If M is not rigidly attached to the arm but is rotating relative to the arm on the axis S which is carried by the arm, as in Fig. 2–4, the lines CA, CB, and AB will no longer necessarily have the same angular speed. The angles turned through in a given time by these lines

depend not only on the speed at which the arm is turning about C but also upon the speed at which M is turning about the axis S relative to the arm.

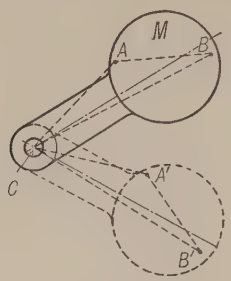

FIG. 2–3

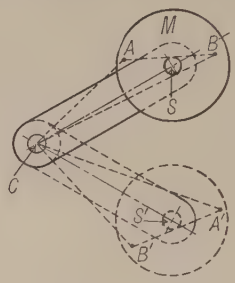

FIG. 2–4

2–24. Linear Speed of a Point on a Revolving Body. Consider a particle A on the circumference of the wheel in Fig. 2–1. For every revolution of the wheel, A moves over the circumference of a circle of radius R, so that for N turns A moves a distance of $2\pi RN$ linear units. Let v_A = linear speed of A. Then

$$v_A = 2\pi RN \tag{6}$$

and since, from (5), $\omega = 2\pi N$, or $N = \dfrac{\omega}{2\pi}$, by substituting this value of N in (6) we get

$$v_A = \omega R \tag{7}$$

Consider another point B at distance R_1 from the axis. Let v_B represent its speed. Then

$$v_B = \omega R_1$$

or

$$\frac{v_B}{v_A} = \frac{R_1}{R} \tag{8}$$

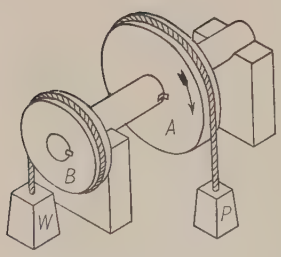

FIG. 2–5

The linear speed of a point on the circumference of a revolving wheel is often referred to as the **periphery speed** or **surface speed.**

Take another case, that of two wheels fast to the same shaft as shown in Fig. 2–5. The weight P is supposed to be hung from a very thin steel band which is wound on the outside of wheel A and the weight W from another steel band wound on the outside of wheel B. Suppose that the shaft starts to turn in the direction shown by the arrow. Then the band which supports P will be paid

out, that is, will unwind, at a speed equal to the periphery speed of A, and the weight P will descend at that speed. At the same time the other band will be winding onto the wheel B and the weight W will be rising at a speed equal to the periphery speed of B. If N represents the number of turns per second of the shaft, R the radius of A, and R_1 the radius of B, then the speed of $P = 2\pi RN$ and the speed of $W = 2\pi R_1 N$, or

$$\frac{\text{Speed } P}{\text{Speed } W} = \frac{R}{R_1}$$

which is the same equation as found when both points were on the same wheel.

2–25. Motion Classified. Since the motion of a body is determined by the motion of not more than three of its component particles not lying in a straight line it is essential before beginning the analysis of the motion of rigid bodies that the laws governing the motion of a particle be fully understood. For this purpose it is convenient to classify motion as applied to a particle or point according to the kind of acceleration which the moving particle has:

1. Acceleration zero.
2. Acceleration constant.
3. Acceleration variable.
   - (*a*) According to some simple law which may be expressed in terms of s, v, or t.
   - (*b*) In a manner which can be expressed only by a graph or similar means.

A brief consideration will now be given to the methods of analyzing each of these cases for a particle having rectilinear motion. Later on it will appear that the same general principles, with proper modifications, will apply to a particle moving in a curved path and to the angular motion of a line.

2–26. Uniform Motion. When the acceleration is zero the velocity is constant and the moving particle continues to move in a straight line over equal distances in equal intervals of time. The velocity (or speed) therefore is equal to the length of the path divided by the time required to traverse the path, or

$$v = \frac{s}{t} \tag{9}$$

where v is expressed in linear units per unit of time.

2–27. Uniformly Varying Motion. In this case the acceleration is constant; that is, the speed changes by equal amounts in equal intervals of time, like that of a body falling under the action of gravity.

Let a represent the acceleration, that is, the number of speed units added per unit of time (a minus sign must precede a if the speed is decreasing). Then during a time t the change in speed is at, and if at the beginning of that time interval the speed is v_0 then at the end of time t the speed will be $v_0 + at$. Therefore

$$v = v_0 + at \tag{10}$$

From this it follows that the average speed is

$$\frac{v_0 + v_0 + at}{2} \quad \text{or} \quad v_0 + \tfrac{1}{2}at$$

and since the distance moved is the average speed multiplied by the time

$$s = [v_0 + \tfrac{1}{2}at]t = v_0t + \tfrac{1}{2}at^2 \tag{11}$$

From equations (10) and (11)

$$v = \sqrt{v_0^2 + 2as} \tag{12}$$

If the particle starts from rest, $v_0 = 0$ and the above equations reduce to

$$v = at \tag{13}$$

$$s = \tfrac{1}{2}at^2 \tag{14}$$

$$v = \sqrt{2as} \tag{15}$$

It must be borne in mind that the above equations apply only when the acceleration is constant.

By substituting in equation (14) successive values of t, as $t = 1$, $t = 2$, etc., it will be evident that when a particle starts from rest and moves with constant acceleration the distances moved in *successive equal intervals of time* are in the ratio of the odd numbers 1, 3, 5, 7, 9, etc. Such motion may be applied in machine parts where a piece is required to traverse a given path in a definite period of time, starting from rest at the beginning and coming to rest again at the end of the

Fig. 2–6

path. In this case the piece would increase its speed for each interval of time until it had traveled one-half its path (in one-half the total

time) and decrease its speed at the same rate during the remaining time. For example, if the particle represented by the point A, Fig. 2–6, is to move along the rectilinear path AA_6 in 6 sec, starting from rest at A and coming to rest at A_6, the distances moved over in each of the 6 sec would be as shown.

Therefore

$$AA_1 = \tfrac{1}{18}\,AA_6,\ A_1A_2 = \tfrac{3}{18}\,AA_6,\ A_2A_3 = \tfrac{5}{18}\,AA_6$$

2–28. Variable Acceleration. The acceleration of a moving particle may vary as some function of distance moved, velocity, or time. When this condition exists, definite equations may be written expressing the relations between a, s, v, and t.

Three cases will be considered:

1. a = a function of t.
2. a = a function of v.
3. a = a function of s.

Since the acceleration is the time rate of change of velocity, if this rate of change in a time Δt is constant then $a = \dfrac{\Delta v}{\Delta t}$ and as Δt is decreased indefinitely this approaches as a limit $\dfrac{dv}{dt}$.

Hence $a = \dfrac{dv}{dt}$ at any instant.

Therefore at the end of time t,

$$v = \int_{t_0}^{t} a\,dt \tag{16}$$

Similarly

$$v = \frac{ds}{dt} \quad \text{or} \quad s = \int_{t_0}^{t} v\,dt \tag{17}$$

Again, from $v = \dfrac{ds}{dt}$,

$$dt = \frac{ds}{v} \quad \therefore t = \int \frac{ds}{v} \tag{18}$$

From the two equations $v = \dfrac{ds}{dt}$ and $a = \dfrac{dv}{dt}$ we have

$$\frac{v}{a} = \frac{ds}{dv} \quad \text{or} \quad v\,dv = a\,ds \tag{19}$$

and

$$\int v\,dv = \int a\,ds \tag{20}$$

whence

$$v^2 = 2\int a\,ds \tag{21}$$

By the use of these equations problems involving any of the above cases may be solved. In some instances, especially when v_0 has some value other than zero, the resulting equations may be awkward to solve. It might be advisable to resort to a semi-graphical solution, to be explained later.

The same formulas will apply to angular motion if acceleration, distance moved, and velocity are expressed in radians instead of linear units.

2–29. Summary of Formulas.

Rectilinear		Angular	
t = time,		t = time,	
s = linear displacement,		θ = angular displacement,	
v = linear velocity,		ω = angular velocity,	
v_0 = linear velocity when $t = 0$.		ω_0 = angular velocity when $t = 0$.	
a = linear acceleration.		α = angular acceleration.	
$v = \frac{s}{t}$	(v constant)	$\omega = \frac{\theta}{t}$	(ω constant)
$v = \frac{ds}{dt}$	(v variable)	$\omega = \frac{d\theta}{dt}$	(ω variable)
$a = \frac{dv}{dt} = \frac{d^2s}{dt^2}$	(a variable)	$\alpha = \frac{d\omega}{dt} = \frac{d^2\theta}{dt^2}$	(α variable)
$v = v_0 + at$	(a constant)	$\omega = \omega_0 + \alpha t$	(α constant)
$s = v_0 t + \frac{1}{2}at^2$	(a constant)	$\theta = \omega_0 t + \frac{1}{2}\alpha t^2$	(α constant)
$v = \int a\,dt$	(a variable)	$\omega = \int \alpha\,dt$	(α variable)
$s = \int v\,dt$	(a variable)	$\theta = \int \omega\,dt$	(α variable)
$v = \sqrt{v_0^2 + 2as}$	(a constant)	$\omega = \sqrt{\omega_0^2 + 2\alpha\theta}$	(α constant)
$v\,dv = a\,ds$		$\omega\,dw = \alpha\,d\theta$	
$v = \sqrt{v_0^2 + 2\int a\,ds}$	(a variable)	$\omega = \sqrt{\omega_0^2 + 2\int \alpha\,d\theta}$	(α variable)

2–30. Semi-Graphical Methods. In many cases no direct relation exists between acceleration, velocity, distance moved, and time which can conveniently be expressed in the form of equations. The data may

be obtained by observations or computations at certain frequent intervals during the cycle of motion and the relations worked out on graphs.

Three cases arise corresponding to the three given at the beginning of § 2–28.

The process of working problems of this type consists of approximating, by means of graphs, the necessary differentiations or integrations instead of solving for them directly from equations (16) to (21). Small finite increments Δs, Δv, and Δt are used instead of the infinitely small ds, dv, and dt. Then where differentiation is required the ratio of $\frac{ds}{dt}$ or $\frac{dv}{dt}$ is found from measurements on the drawing. Similarly, where, in the use of the equations, integration is involved, the approximate equivalent is obtained by summation of the finite increments found from the drawing (this is expressed by Σ instead of the integral sign $\int$). For instance $\Sigma\, \Delta v$ means the summation of the successive values of Δv.

The following examples will serve to illustrate the methods, and cases not covered by these examples may be worked out by similar processes.

Example 1. *Graphical Differentiation.* Let s represent the distance moved from some initial or reference position by a particle having rectilinear motion. The values of s for a series of successive values of t are found by observation to be as shown by the following table :

t seconds	s inches	t seconds	s inches
0.0	0.0	2.5	8.0
0.5	1.0	3.0	10.0
1.0	2.5	3.5	11.5
1.5	4.0	4.0	12.5
2.0	6.0	4.5	13.0

Required: to find the velocity (v) and the acceleration (a) for each of these values of t.

Solution. See Fig. 2–7. Choose some unit of length to represent one unit of time, and some other to represent one unit value for s. With these scales plot a curve with values of t for abscissas and the corresponding values of s as ordinates. This will be called the space-time curve.

At each of the time stations draw a tangent to the space-time curve. With this tangent as the hypotenuse construct a right triangle whose base is parallel to the time axis and whose length represents one time unit or some convenient fraction or multiple of one unit. Then the ratio of the vertical leg to the base of this triangle

represents the value of $\frac{\Delta s}{\Delta t}$ as Δt is made to approach zero. In other words, Δs represents what would be the increment of displacement in time Δt if the instantaneous rate of increase were to remain constant during the time Δt. Hence

$$\frac{\Delta s}{\Delta t} = \frac{ds}{dt} = v \text{ at that instant}$$

In the figure the construction is shown at the point on the curve corresponding to 3.5 sec. In dividing Δs by Δt, care must be taken to express Δs in displacement

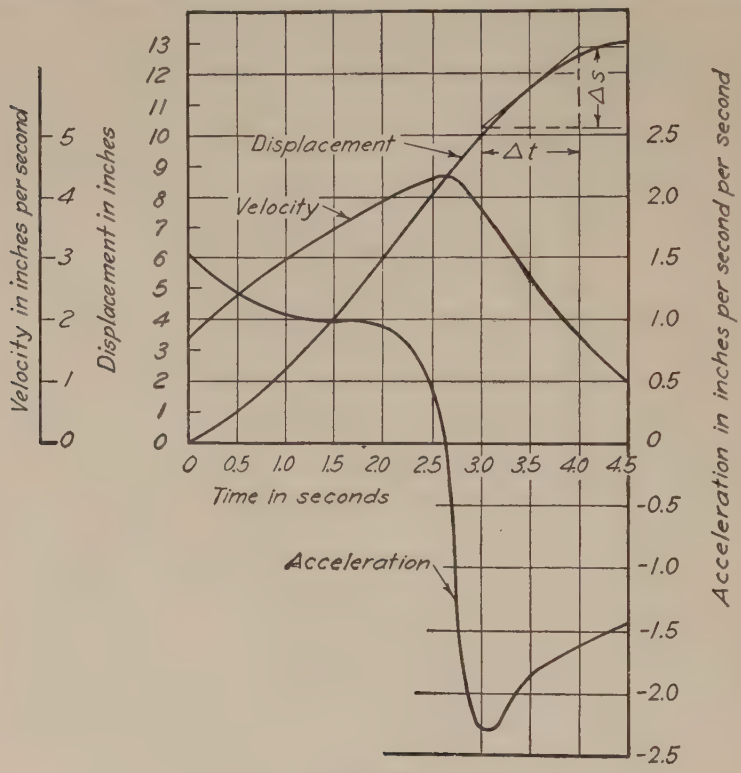
Velocity in inches per second
Displacement in inches
Acceleration in inches per second per second
Time in seconds
Displacement
Velocity
Acceleration
Δs
Δt
0 0.5 1.0 1.5 2.0 2.5 3.0 3.5 4.0 4.5
0 1 2 3 4 5
0 1 2 3 4 5 6 7 8 9 10 11 12 13
0 0.5 1.0 1.5 2.0 2.5
0 -0.5 -1.0 -1.5 -2.0 -2.5

FIG. 2–7

units as indicated by the scale of the graph and Δt in time units. For example, if the vertical leg of the triangle should measure $\frac{3}{4}$ in. and the scale of ordinates is such that 1 in. represents 4 in. displacement then $\Delta s = \frac{3}{4} \times 4$ or 3 in. The values of $v = \frac{\Delta s}{\Delta t}$ for each of the given values of t having been obtained, they may be plotted as ordinates against the same time units, either at the same scale as in the previous graph or at any other scale if more convenient. A similar process of " differentiating " the velocity-time curve may then be followed to obtain the acceleration. The only approximation in the above method is that involved in the accuracy of the drafting. The velocity-time and acceleration-time curves are shown in the figure.

Example 2. *Graphical Integration.* Given values of a for a series of known values of t as shown in the following table. Assume the particle to start from rest ($v_0 = 0$) and move in a straight line. Required: to find v and s.

t seconds	a inches per second^2	t seconds	a inches per second^2
0.0	3.00	2.5	0.00
0.5	2.50	3.0	−0.25
1.0	1.50	3.5	−0.63
1.5	0.75	4.0	−2.00
2.0	0.25	4.5	−3.50

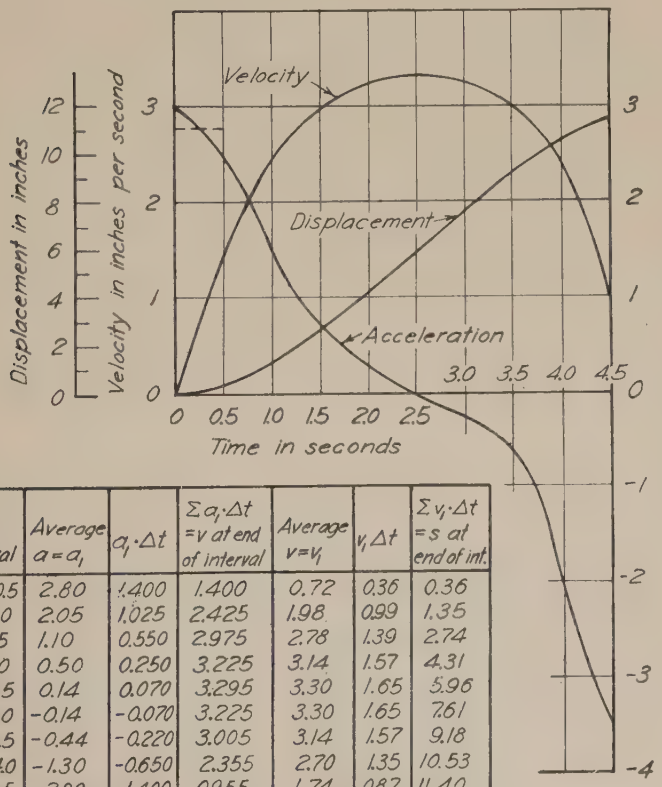
Velocity
Displacement
Acceleration
Displacement in inches
Velocity in inches per second
Acceleration in inches per sec. per sec.
Time in seconds
0 0.5 1.0 1.5 2.0 2.5 3.0 3.5 4.0 4.5
0 2 4 6 8 10 12
0 1 2 3
0 1 2 3 -1 -2 -3 -4

Time Interval	Average $a = a_i$	$a_i \cdot \Delta t$	$\Sigma a_i \cdot \Delta t$ = v at end of interval	Average $v = v_i$	$v_i \Delta t$	$\Sigma v_i \cdot \Delta t$ = s at end of int.
0.0 to 0.5	2.80	1.400	1.400	0.72	0.36	0.36
0.5 - 1.0	2.05	1.025	2.425	1.98	0.99	1.35
1.0 - 1.5	1.10	0.550	2.975	2.78	1.39	2.74
1.5 - 2.0	0.50	0.250	3.225	3.14	1.57	4.31
2.0 - 2.5	0.14	0.070	3.295	3.30	1.65	5.96
2.5 - 3.0	-0.14	-0.070	3.225	3.30	1.65	7.61
3.0 - 3.5	-0.44	-0.220	3.005	3.14	1.57	9.18
3.5 - 4.0	-1.30	-0.650	2.355	2.70	1.35	10.53
4.0 - 4.5	-2.80	-1.400	0.955	1.74	0.87	11.40

FIG. 2–8

Solution. See Fig. 2–8. Plot a curve with t values for abscissas and corresponding a values as ordinates, choosing convenient scales. Obtain the average value of a during each of the intervals by constructing a rectangle whose area is equal as nearly as may be estimated to the area included under that portion of the curve. This is shown by the dotted line across the 0 to 0.5 interval. Now, since average $a = \frac{\Delta v}{\Delta t}$, then Δv = Average $a \cdot \Delta t$. That is, the amount of velocity added during each time interval is equal to the average acceleration multiplied by the length of the interval. Record these values as shown in columns 2 and 3 of the table accompanying the plot in Fig. 2–8 and obtain their summation as shown in column 4. Thus the values of v at the end of each interval are found. Plot a v–t curve from these values, and get the values of s in a similar way, as shown in columns 5, 6, and 7.

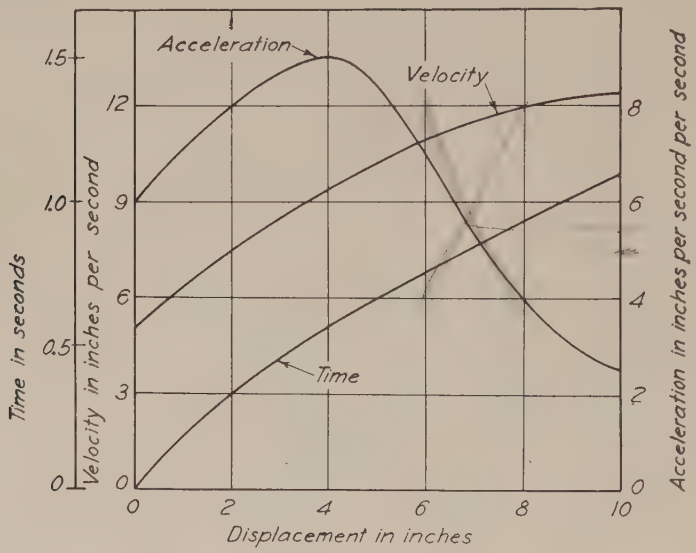

Space Interval	Average a	$a \cdot \Delta s$	$\Sigma a \cdot \Delta s$	$\sqrt{v_0^2 + 2\Sigma a \Delta s} = v$ at end of interval	Average v	$\Delta t = \frac{\Delta s}{v}$	$\Sigma \Delta t = t$ at end of interval
0–2	7.05	14.10	14.10	7.29	6.15	0.325	0.325
2–4	8.55	17.10	31.20	9.35	8.37	0.239	0.564
4–6	8.25	16.50	47.70	10.97	10.23	0.195	0.759
6–8	5.38	10.76	58.46	11.91	11.52	0.174	0.933
8–10	3.16	6.32	64.78	12.43	12.15	0.164	1.097

FIG. 2–9

Example 3. Given the values of a for a series of known values of s as shown in the following table:

s inches	a inches per second^2
0	6
2	8
4	9
6	7
8	4
10	2.5

Let $v_0 = 5$ in. per sec. To find v and t.

Solution. See Fig. 2–9. The process is somewhat similar to that used in Example 2, with the modifications made necessary by the fact that the data show the relation between a and s instead of a and t. The figure shows the curves, and the table which accompanies it records the steps involved in the solution.

2–31. Harmonic Motion. A type of motion in which the acceleration varies directly as the displacement is known as **simple harmonic**

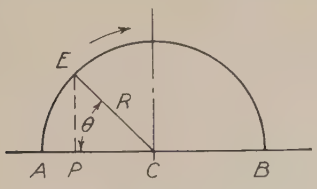

Fig. 2–10

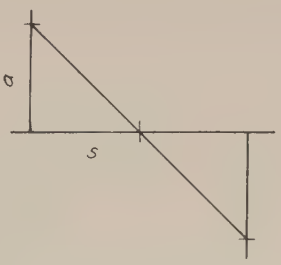

Fig. 2–11

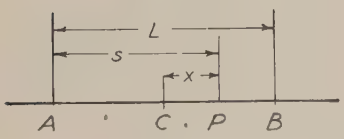

Fig. 2–12

motion. The most common example is reciprocation over a straight path with the sense of the acceleration always toward the center of the path and its magnitude directly proportional to the distance of the moving particle from that center. The nature of the motion may be visualized by reference to Fig. 2–10. Suppose a particle E to be moving with uniform speed around the circumference of a semicircle of radius

R, center C, and diameter AB. Another particle P moves along the diameter AB at such a variable speed that it is at all times at the foot of a perpendicular dropped from E to AB. When E is at A, P is at A also. If E moves with a linear speed V_E the radial line CE will turn at an angular speed equal to $\frac{v_E}{R}$. Call this constant angular speed ω. Then $\omega = \pi \div$ time required for the motion from A to B. Then

$$v_E = \omega R$$

Now the displacement $s = AP = AC - PC = R - R \cos \theta$. Therefore

$$s = R\,(1 - \cos \theta) \tag{22}$$

Putting $\theta = \omega t$, we get $s = R\,(1 - \cos \omega t)$. Let v_P = velocity of P. Then

$$v_P = \frac{ds}{dt} = \omega R \sin \omega t = \omega R \sin \theta \tag{23}$$

Since $\omega R = v_E$, equation (23) may be written $v_P = v_E \sin \theta$. Again,

$$a_P = \frac{dv_P}{dt} = \frac{d}{dt}\omega R \sin \omega t$$

Therefore $$a_P = \omega^2 R \cos \omega t = \omega^2 R \cos \theta \tag{24}$$

But $\cos \theta = \frac{CP}{R}$. Therefore

$$a_P = \omega^2 CP \tag{25}$$

From this it appears that the acceleration of the particle P is proportional to its distance from the center of its path. When P is approaching C its velocity is increasing, and when receding from C its velocity is decreasing. That is, P has its maximum velocity when it coincides with C and zero velocity when at A or B. It has its maximum acceleration when at A or B and zero acceleration when at C.

Fig. 2 11 shows the a–s graph corresponding to Fig. 2–10 with $v_E = R$, that is $\omega = 1$ radian per unit time.

2–32. General Equations for Harmonic Motion. Although equations (22) to (25) are simple and quite generally applicable, it may be desirable to have equations expressing the relations between a, s, v, and t derived without reference to the point E of Fig. 2–10.

In Fig. 2–12, let L be the length of the path over which P reciprocates with harmonic motion; C its mid point. From the definition of har-

monic motion given in § 2–31, a_P varies with x, with a sign opposite that of x; that is, a_P is negative when x is positive. Let x be negative when at the left of C and positive when at the right.

Then we may say that $a_P = -kx$ where k is any positive constant. By reference to § 2–31 it will be seen that $k = \left(\frac{\pi}{T}\right)^2$, where T = time for complete motion over distance L.

From the figure, $$s = \frac{L}{2} + x \quad \text{or} \quad x = s - \frac{L}{2}$$

Then $$a_P = -k\left[s - \frac{L}{2}\right] = k\left[\frac{L}{2} - s\right]$$

From equation (20)

$$\int v\,dv = \int a\,ds$$

Therefore

$$\int v\,dv = k\int_0^s \left[\frac{L}{2} - s\right] ds$$

or

$$v^2 = k(Ls - s^2)$$

Hence

$$v = \sqrt{kLs - ks^2} \tag{26}$$

Again, from equation (18)

$$t = \int \frac{ds}{v} = \frac{1}{\sqrt{k}} \int_0^s \frac{ds}{\sqrt{Ls - s^2}} = \frac{1}{\sqrt{k}} \cos^{-1}\left[1 - \frac{2s}{L}\right] \tag{27}$$

If the equations are desired in terms of x instead of s (Fig. 2–12) they may be derived in a similar manner with results as follows, bearing in mind that in this case v_0 is the velocity when P is at C and $t_1 = 0$ at that position.

$$v = \sqrt{v_0^2 - k^2x^2} \tag{28}$$

$$t_1 = \frac{1}{\sqrt{k}} \sin^{-1}\left[\frac{\sqrt{k} \cdot x}{v_0}\right] \tag{29}$$

2–33. Variable and Constant Speed. Instead of causing a moving piece or particle to travel its entire path with variable motion, it is sometimes desirable to have it travel the major portion of its path with

uniform motion, accelerating for a short interval at the beginning, until it has acquired sufficient speed to travel the uniform part in the time allowed, and retarding for a similar interval after the uniform motion is completed, so as to have lost all speed when reaching the end of its path. The acceleration and retardation may be uniform or harmonic, or of any other character.

In Fig. 2–13 let it be assumed that a body, represented by a point, is to start from rest at A and move to A_1 in time T, accelerating uniformly

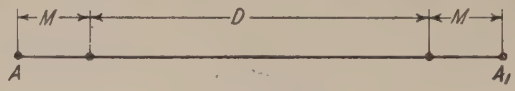

Fig. 2–13

over the distance M at the beginning, moving with constant speed over the distance D, and retarding uniformly over distance M at the end, coming to rest at A_1. Let t be the time required to move the distance M with constant acceleration a, and v the speed at the end of time t.

Then $$M = \tfrac{1}{2}\, at^2 \quad \text{or} \quad a = \frac{2\,M}{t^2}$$

but $$v = at = \frac{2\,M}{t}$$

also $$v = \frac{D}{T - 2\,t}$$

therefore $$\frac{2\,M}{t} = \frac{D}{T - 2\,t}$$

whence $$t = \frac{2\,MT}{4\,M + D} \tag{30}$$

In Fig. 2–14 let the conditions be the same as in Fig. 2–13 except that the acceleration and retardation are in accordance with the law of simple

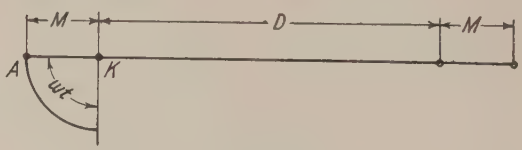

Fig. 2–14

harmonic motion. Draw a quadrant of a circle with radius M as shown. Let ω = the angular speed at which the radius of this circle moves as the point A accelerates to K; v = velocity when the point reaches K.

Then $$\omega = \frac{\pi}{2\,t}$$

$$v = \omega M = \frac{\pi M}{2\,t} \quad \text{also} \quad v = \frac{D}{T - 2\,t}$$

$$\frac{\pi M}{2\,t} = \frac{D}{T - 2\,t}$$

whence $$t = \frac{\pi M T}{2\,\pi M + 2\,D} \tag{31}$$

PROBLEMS

II–1. A particle moves in a straight line in such a way that $s = (2\,t)$ feet where t is in seconds. Is its acceleration zero, or has it constant or variable acceleration? Find v when $s = 0$.

II–2. If a particle moves along a straight path in such a way that $s = (2\,t^2)$ feet, where t is in seconds, what kind of acceleration has it? Find the acceleration when $t = 5$ sec. Find v when $t = 10$ sec.

II–3. Same as II–2 except that $s = (2\,t^3 + t^2)$ feet.

II–4. If the acceleration a of a particle is 3 in. per sec per sec and its initial velocity v_0 is zero, find the time required for this particle to move 27 in. Find v at the end of this time.

II–5. Let $a = 1200$ ft per min per min and $v_0 = 100$ in. per sec. Find s in inches and v in inches per second at the end of 10 sec.

II–6. A particle starts from rest and accelerates at constant rate for 3 min, at the end of which time it has acquired enough velocity to carry it at uniform velocity a distance of 10 ft in 2 min. Find a during first 3 min and v at the end of that time.

II–7. A particle is moving in a straight line. $a = 60$ ft per min per min constant. When passing another fixed particle B it has a velocity of 40 ft per min. What will be its velocity when it has moved 2000 ft from B?

II–8. Let $a = (v + 3)$ ft per min per min. Find s and t when $v = 12$ ft per min. $v_0 = 0$.

II–9. Let $a = \frac{1}{v}$ ft per sec per sec; $v_0 = 5$ ft per sec. Find v and t when $s = 25$ ft.

II–10. Let $a = 4\,s$ ft per sec per sec; $v_0 = 5$ ft per sec. Find v and s at the end of 4 sec.

II–11. Let $a = (2\,s + 3)$ ft per sec per sec; $v_0 = 0$. Find a, v, and t when $s = 7$ ft.

II–12. Referring to Fig. 2–10, let $OE = 4$ in. Find the speed and acceleration of P when $\theta = 75°$ if CE has an angular speed of 240 π radians per min.

II–13. A particle moves with harmonic motion, over a path 12 in. long, in 5 sec. Find a, v, and t when it has moved 3 in. from one end.

II–14. A particle reciprocates with harmonic motion over a path 6 in. long. $a = -16\,s$ in. per sec per sec, where s is the displacement from the center of its path. Find a and v when the particle is $1\frac{1}{2}$ in. from left end of path and moving to right. Indicate sense of each. Find time t required for this $1\frac{1}{2}$-in. motion and for the entire 6-in. motion.

II–15. Let $a = t^2$ feet per second per second; $v_0 = 5$ ft per sec. Find t and v when $s = 27$ ft.

II–16. Let $a = -t$ feet per second per second; $v_0 = 800$ ft per sec. How long a time will be required for the particle to come to rest, and how far will it travel in that time?

II–17. A particle moves in a straight line in such a way that its displacement s, in inches, from a given reference point at successive 1-sec intervals from 0 to 6 both inclusive is 4.1, 4.5, 4.2, 3.0, 1.45, 0.40, 0 respectively. Plot a displacement-time curve. Scales: Time 1 in. = 1 sec. Displacement 1 in. = 1 in. From this curve find the velocity for each value of t.

II–18. A particle moves in a straight line. Its velocity at successive seconds from 0 to 6 inclusive is 0, 0.814, 1.571, 2.220, 2.712, 3.03, π, all in inches per second. Plot a velocity-time curve. Scales: Time 1 in. = 1 sec. Velocity 2 in. = 1 in. per sec. From this curve determine the displacement at the end of each second.

II–19. A particle moves in a straight line. By means of suitable instruments the acceleration is measured at a given instant and at the end of each 2-ft interval of displacement until it has moved 12 ft. The values of a in feet per minute per minute are: 6, 4, $3\frac{1}{2}$, 3, $1\frac{1}{2}$, 0, -1. Plot an acceleration-displacement curve. Scales: Displacement 1 in. = 2 ft. Acceleration 1 in. = 1 ft per min per min. From this curve find v at the end of each 2-ft interval. Assume that v_0 was 3 ft per min when the first measurement of a was made.

II–20. A block is to start from rest and slide along a rectilinear path 12 in. long in 8 sec. It is to accelerate uniformly over half its path during the first 4 sec, and retard at the same rate during the remaining 4 sec. Determine the acceleration in inches per second and the speed at the end of the fourth second. Draw half size the path of one point on the block, and show and dimension the position of the point at the end of each second.

II–21. A point is to start from rest, accelerate uniformly for $1\frac{1}{2}$ in., then move at a constant speed for 15 in., and retard uniformly for $1\frac{1}{2}$ in., coming to rest at the end. The time allowed for the entire motion is 18 sec. Find the time required for acceleration, and the speed when moving at constant speed.

II–22. Same as Prob. II–21 except that the acceleration and retardation are to be according to the laws of simple harmonic motion.

CHAPTER III

VECTORS

3–1. Scalar and Vector Quantities. A scalar quantity is one which has magnitude only, as 1 ft, 2 lb, etc. A vector quantity is one which has magnitude, direction, and sense, such as force, velocity, acceleration.

3–2. Vectors. A vector is a line which represents a vector quantity. The length of the line, drawn at any convenient scale, shows the magnitude, the direction of the line is parallel to the direction in which the

FIG. 3–1

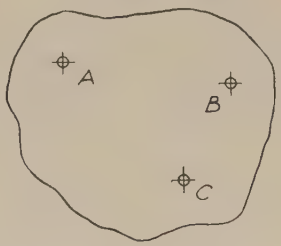

FIG. 3–2

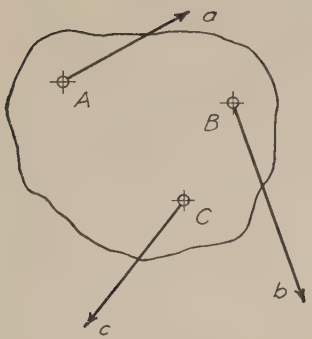

FIG. 3–3

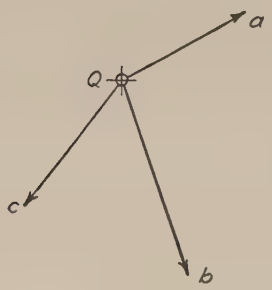

FIG. 3–4

quantity acts, and an arrowhead or some other suitable convention indicates the sense of the quantity. (See Fig. 3–1.) The initial end of the line is the **origin,** and the other end is the **terminus.** The sense of the quantity is from the origin to the terminus, and often an arrowhead is placed at the terminus.

The principal use of vectors is for the solution of problems involving

vector quantities. Many such problems are difficult of solution by computation but are readily solved by geometric constructions employing vectors.

The principles and methods discussed in this chapter apply to vectors in general without regard to the nature of the quantities which the vectors represent. In later chapters these principles are applied to specific quantities such as velocity and acceleration.

3–3. Space Diagram. In Fig. 3–2 the irregular line represents a portion of a rigid body k, and the points ABC indicate the position of three particles or points in or on the body. Such a diagram, showing the relative position of certain points, lines, etc., on a body or a group of bodies, is called a **space diagram.** Usually it must be drawn at a reduced scale, but all dimensions must be represented at the same scale so as to show parts in proper proportion.

3–4. Position of Vectors. A vector may be drawn anywhere, without regard to the position of the point to which it applies. If several points are under consideration, usually their vectors are drawn either on the space diagram, or on a separate figure from a common origin. In Fig. 3–3 the vectors Aa, Bb, Cc, representing the velocities of particles at A, B, and C, respectively, are drawn on the space diagram using points A, B, and C as origins. In Fig. 3–4 the equivalent vectors are drawn from a common origin Q, and the point to which a vector applies is shown by a lower-case letter at the terminus of the vector. Sometimes this is called the **vector polygon.**

3–5. Vector Addition. The sum of two vector quantities is a quantity whose effect is the same as the combined effect of the two original quantities. Consequently, the sum of two vectors is a vector representing the sum of the two quantities shown by the vectors themselves. Similarly, a vector may be drawn representing the sum of any number of vector quantities. The sum of the quantities is called their **resultant,** and its vector the **resultant vector.** The quantities added together to obtain the resultant are its **components,** and the corresponding vectors the **component vectors.**

The following general statements will be found to hold true for vectors lying in the same plane.

The sum of two vectors is the diagonal of a parallelogram of which the two component vectors drawn from a common origin, form the sides.

The sum of two vectors is the closing side of a triangle whose other two sides are formed by using the terminus of one of the component vectors as the origin for the second.

The sum of any number of vectors is the closing side of a polygon of which the component vectors form the sides.

The significance of the above statements may be seen by reference to Figs. 3–5 to 3–8.

Referring to Fig. 3–5, let particle A be given two simultaneous impulses, one of which if acting alone, would impart a velocity represented by vector Aa_1 and the other a velocity Aa_2. Then the actual velocity due to the combined impulses is shown by the vector Aa.

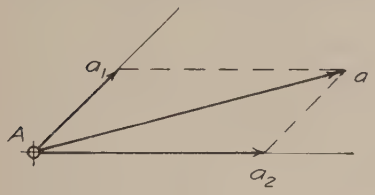

FIG. 3–5

FIG. 3–6

The same result is obtained in Fig. 3–6 by drawing from A one of the component vectors Aa_1 then, using its terminus a_1 as an origin, drawing the other vector a_1a equal and parallel to Aa_2. The closing side Aa is the resultant. The sense of the resultant is Aa from the first origin to the last terminus. This process may be expressed in the form of an equation

$$Aa = Aa_1 \overrightarrow{+} Aa_2,$$

which would be read: Aa is the vector sum of Aa_1 and Aa_2.

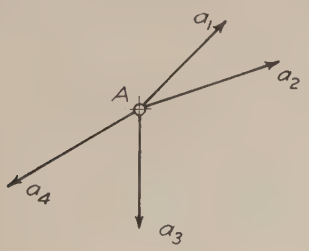

FIG. 3–7

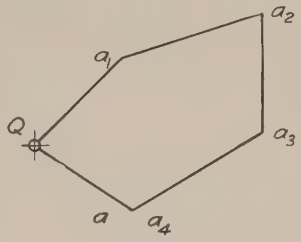

FIG. 3–8

In adding parallel vectors, the vector sum is of the same magnitude as the arithmetical sum if the senses are alike, and as the arithmetical difference if the senses are opposite.

In Fig. 3–7, Aa_1, Aa_2, Aa_3, Aa_4 are component vectors all applying to particle A. They may represent forces or velocities or any other vector quantities, but all must represent the same kind of vector quantities and all must be drawn at the same scale. Required to find their vector sum. In Fig. 3–8 draw any one of the given vectors from a point Q. (In the figure Qa_1 is drawn first equal and parallel to Aa_1.) Then

use a_1 as an origin and draw a_1a_2 equal and parallel to Aa_2. Continue the process, making a_2a_3 equal and parallel to Aa_3 and a_3a_4 equal and parallel to Aa_4; then a line Qa_4 drawn from Q to a_4 is the sum of the other vectors, its sense being from Q toward a_4.

This is expressed as an equation thus:

$$Qa_4 = Aa_1 \overrightarrow{+} Aa_2 \overrightarrow{+} Aa_3 \overrightarrow{+} Aa_4$$

The order in which the vectors are drawn is immaterial. The vectors in Fig. 3–7 might be added by combining two of the vectors in a parallelogram, then combining the diagonal of that parallelogram with a third component vector, and so on. The method of Fig. 3–8 is simpler and involves less chance for error or inaccuracy.

If it is desired to compute the length of the resultant vector and the angle which it makes with some known reference line it would be necessary to compute by trigonometry the third side of the triangle Qa_1a_2, that is, the resultant of Aa_1 and Aa_2; then the third side Qa_3 of the triangle Qa_2a_3, and so on.

3–6. Resolution by Vectors. A vector quantity whose magnitude, direction, and sense are known may be considered to be the resultant of a pair of components in any two directions and the magnitude and sense of the components may be found by constructing a parallelogram whose diagonal is the given resultant vector and whose sides are parallel to the known directions of the desired components. This process is known as **resolution into components.** The resolution may be accomplished by constructing a triangle instead of a parallelogram.

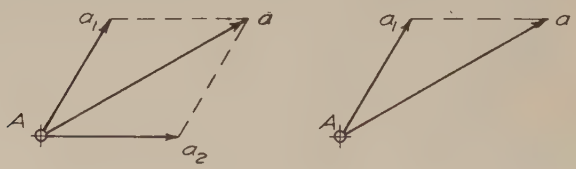

Fig. 3–9

Example 1. See Fig. 3–9. Given a vector Aa representing a quantity acting along a line 30° with the horizontal. To resolve it into components along a horizontal line and along a line making 60° with the horizontal. The solution is made in the figure both by the parallelogram and the triangle.

3–7. Subtraction by Vectors. To subtract a vector quantity Aa_1 from the vector quantity Aa is to find the component which, when added (vectorially) to Aa_1, will give Aa as a resultant. Hence to subtract Aa_1 from Aa add to Aa a vector equal and parallel to Aa_1 but with the opposite sense.

Example 2. Referring to Fig. 3–10, let it be required to subtract vector Aa_1 from Aa. From any point Q draw Qa_2 equal, parallel, and with the same sense as Aa;

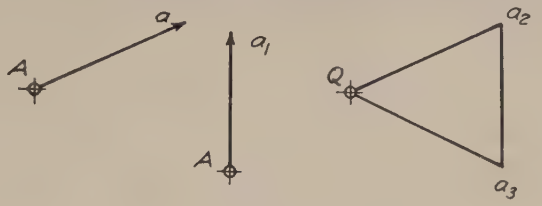

Fig. 3–10

from a_2 draw a_2a_3 equal and parallel to Aa_1 but with the opposite sense. Then Qa_3 is the desired vector difference.

This may be written

$$Qa_3 = Aa \rightleftarrows Aa_1$$

which would be read: Qa_3 is the vector difference of Aa and Aa_1.

In subtracting parallel vectors the vector difference is of the same magnitude as the arithmetical difference if the senses are alike and as the arithmetical sum if the senses are opposite.

3–8. Components along Axes at Right Angles. In the solution of problems it is often desirable to resolve a vector into its components along two axes at 90° with each other. Thus in Fig. 3–11 the vector

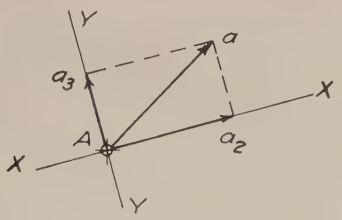

Fig. 3–11

Aa is resolved into its components Aa_2 and Aa_3 along XX and YY. It is to be noted that Aa_2 and Aa_3 are the projections of Aa on axes XX and YY, respectively. A component along an axis, found by dropping a perpendicular upon that axis from the end of the vector may be called the **total component** of the vector along that axis. That is, the total component of a vector quantity along a given axis is the vector sum of the projections on that axis of all the components of the quantity.

In Fig. 3–12, Aa is the resultant of two original components Aa_5 and Aa_6. If each of these three vectors is resolved into its total com-

ponents along the rectangular axes XX and YY, then

$$Aa_2 = Aa_8 \overrightarrow{+} Aa_4$$
$$Aa_3 = Aa_7 \overrightarrow{+} Aa_9$$

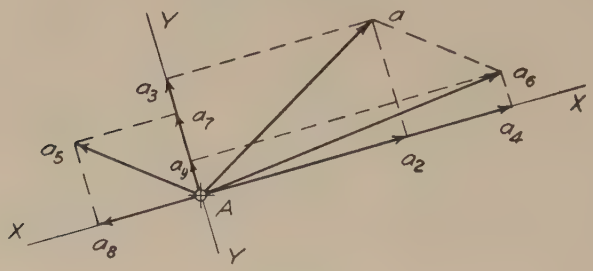

Fig. 3–12

In Fig. 3–13 the vector Aa is resolved into total components along the rectangular axes XX and YY and again along ZZ and PP.

If the total components along any two of these axes are known, the

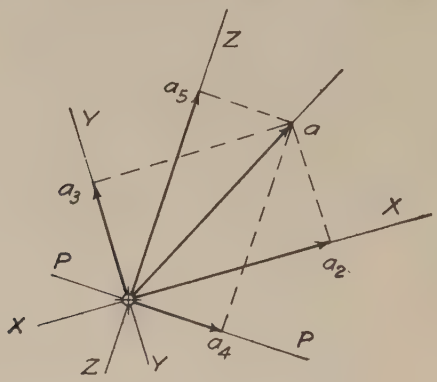

Fig. 3–13

vector Aa can be found by erecting a perpendicular to each of the two known components at its terminus. The intersection of the perpendiculars is the terminus of the resultant, Aa.

It should be observed that Aa is the vector sum of Aa_2 and Aa_3 and also of Aa_4 and Aa_5 but is *not* the vector sum of Aa_3 and Aa_4 or Aa_2 and Aa_5.

Example 3. A particle A has a velocity such that its total component vector in a direction XX is Aa_2, and the point is known to be moving at the instant in a direction 45° with XX upward. To find the true velocity vector. See Fig. 3–14.

Draw vector Aa_2 and line AM making 45° with Aa_2. At a_2 erect a perpendicular to Aa_2 meeting AM at a. Then Aa is the required vector.

Example 4. In Fig. 3–15 a point at A is to have a displacement such that its total component along XX is Aa_2 and along ZZ is Aa_5. To find the displacement. Erect perpendiculars to Aa_2 and Aa_5 at a_2 and a_5, respectively. These perpendiculars intersect at a, giving Aa as the required displacement.

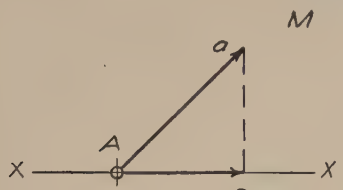

Fig. 3–14

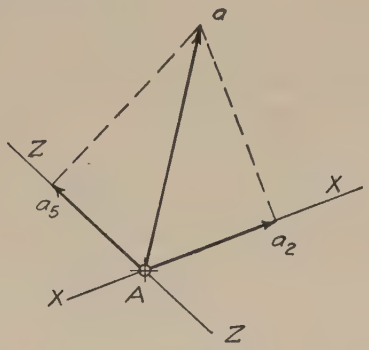

Fig. 3-15

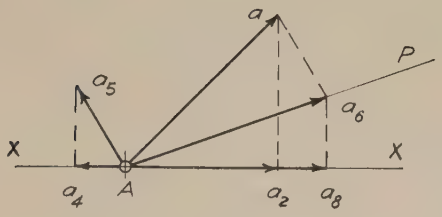

Fig. 3–16

Example 5. In Fig. 3–16 a particle at A has two forces acting on it, one of which if acting alone would cause a velocity Aa_5. The other force acts along the line AP and has such an effect upon the velocity of A that the total component of the resultant (when both forces act) is Aa_2 along the line XX. To find the vector for the component caused by the second force and to find the resultant:

Since the component Aa_5 itself has a total component along XX equal to Aa_4, to the left, the other force must cause a velocity which will have a total component along XX to the right equal to $Aa_4 + Aa_2 = Aa_8$ (or $Aa_8 = Aa_2 \rightrightarrows Aa_4$). Since this force acts along AP the velocity caused by it will be Aa_6, where a perpendicular to Aa_8 at a_8 meets AP. The resultant velocity of A is Aa, the diagonal of a parallelogram with Aa_5 and Aa_6 as sides.

PROBLEMS

III–1. A vector Bb is 1 in. long and makes an angle of 45° with the horizontal. Its sense is upward to the right. Vector Cc is $1\frac{1}{2}$ in. long, 30° with horizontal, downward to the right. Find their vector sum.

III–2. A vector Bb, 2 in. long, upward to left at 45° with horizontal, is the resultant of two components, one horizontal, the other along an axis 60° with the horizontal sloping upward to the right. Find the components.

III–3. Given five vectors Aa_1, Aa_2, Aa_3, Aa_4, Aa_5, whose length, directions, and senses are as follows: Aa_1 is $1\frac{1}{2}$ in. long, north, that is, its direction is along a line north and south and its sense is toward the north. Aa_2 is $1\frac{1}{4}$ in. long, southeast; Aa_3 is 2 in. long, east; Aa_4 is $1\frac{1}{4}$ in. long, southwest; Aa_5 is $1\frac{1}{2}$ in. long, northeast. Find the vector sum of the first four, and subtract Aa_5 from this resultant vector.

III–4. Vector Aa is 1 in. long. Vector Bb is 2 in. long. They make an angle of 60° with each other. Find $Bb \rightleftarrows Aa$.

III–5. A point moves northeast 3 ft per min. Find the total northerly component of its velocity.

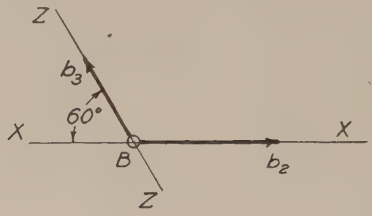

PROB. III–6

III–6. A point moves with such velocity that its total component along ZZ is $Bb_3 = 1$ ft per sec, and total component along XX is $Bb_2 = 1\frac{1}{2}$ ft per sec. Find the velocity, and state its magnitude in feet per second.

CHAPTER IV

VELOCITY ANALYSIS

4–1. Velocity of a Rigid Body. The fact has been mentioned previously that if the motion of a body is translation the velocities of all particles composing the body are equal and parallel, hence it is necessary to know the velocity of only one particle in order to find the velocity of any other particle. If the body has any coplanar motion other than translation (see § 2–12) it is necessary to have enough data to determine the velocity of two particles in order to determine the velocity of any part of the body. In the present chapter coplanar motion only will be considered unless some other kind is stated.

In analyzing the velocity of a rigid body or a group of such bodies the words *point* and *particle* will be used interchangeably. The principal cases which occur are the following:

1. Two or more points on the same body.
2. Points on two or more bodies connected by pin joints.
3. Points on bodies in rolling contact.
4. Points on bodies in sliding contact.

Any given problem is likely to involve any or all of these cases, hence it is essential that the principles involved in each be thoroughly understood.

4–2. Relative Velocity Defined in Terms of Vectors. The velocity of a particle A relative to another particle B is equal to the velocity which if subtracted vectorially from the velocity of A would give a result equal to the velocity of B. If v_A represents the velocity of A, v_B that of B, and $v_A{}^B$ the velocity of A relative to B the above statement may be expressed

$$v_A{}^B = v_A \overrightarrow{-} v_B \tag{1}$$

or

$$v_A = v_B \overrightarrow{+} v_A{}^B \tag{2}$$

The relation shown in equation (2) may be stated in words as follows:

The velocity of a given particle is equal to the velocity of a second particle plus (vectorially) the velocity of the first relative to the second.

In Fig. 4–1, Aa is the velocity vector for A and Bb the vector for B. Draw from a pole Q the two vectors Qa equal to Aa and Qb equal to Bb.

Then ba is the vector representing the velocity of A relative to B, the sense being from b to a. The same line read in the opposite sense, that is, ab, shows the velocity of B relative to A.

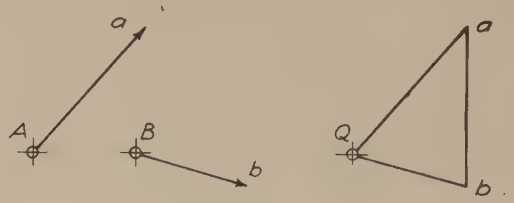

Fig. 4–1

4–3. Line of Connection. If two points, either on the same body or in different bodies, remain always at the same distance from each other the straight line joining them is called their **line of connection.**

4–4. Relative Velocity of Points on a Rigid Body. *If the velocities of two points on a rigid body are resolved into components along and perpendicular to their line of connection, their components along the line of connection must be equal. Hence, the velocity of one relative to the other must be in a direction perpendicular to the line of connection and equal to the vector difference of their components in this direction.*

The above theorem expresses a fundamental law, and the velocity analysis of any mechanism depends upon its proper application.

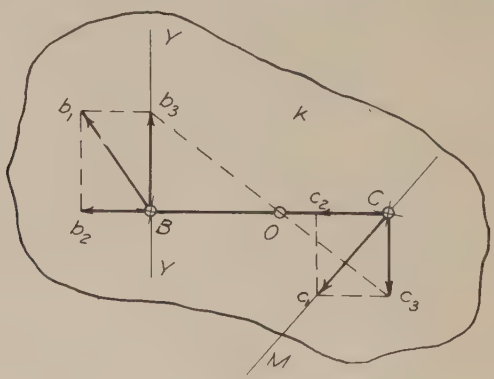

Fig. 4–2

In Fig. 4–2 let body k be assumed to have such a motion that, at the instant, a particle at B has a velocity represented by the vector Bb_1 and a particle at C is moving in the direction CM. To find the velocity vector for C.

Since B and C cannot change their distance from each other they

must have equal total velocity components along the line connecting them. Therefore draw YY perpendicular to CB and resolve Bb_1 along CB and YY, getting Bb_2 and Bb_3. Make Cc_2 equal to Bb_2, and erect a perpendicular to Cc_2 at c_2 meeting CM at c_1. Then Cc_1 is the vector for C.

Note that if line b_3c_3 is drawn cutting CB at O then Cc_3 is to Bb_3 as CO is to BO; and the velocities of all particles in k may for the instant be treated as if consisting of components of translation equal and parallel to Bb_2 plus (vectorially) components of rotation about O. Such a point as O is called the center of rotation components.

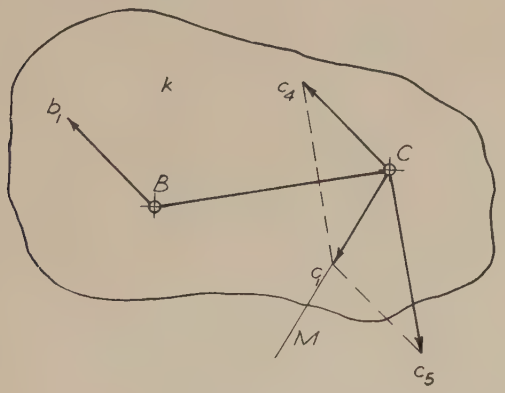

FIG. 4–3

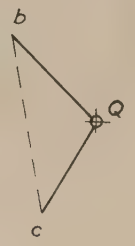

FIG. 4–4

Again, as shown in Fig. 4–3, which is the same case as Fig. 4–2, the velocity of any particle as C may be treated as if the whole body had translation equal and parallel to Bb_1 and rotation about B. In Figs. 4–2 and 4–3 the vectors are drawn on the space diagram. In Fig. 4–4 the same problem is solved by using a common origin or pole on the principle that the velocity of C equals the velocity of B plus (vectorially) the velocity of C relative to B. Draw Qb, the vector for B; add to this a vector whose direction is perpendicular to CB (since that is the only way C can move relative to B). The point where this meets the line having the known direction of C will be the terminus, c, of the vector for C.

From the above it appears that the translation may be assumed to take place in any direction, with the axis of rotation in a position to be determined by the conditions of the problem.

Example 1. Referring to Fig. 4–5, given the velocity Bb_1 for a particle at B and the direction CJ of the velocity of another particle C. Required to find the velocity of C and also that of P. All three particles are on the same rigid body k.

Solution. First find Cc_1, the velocity of C, as explained in connection with Fig. 4–2. Next find the total component of Bb_1 along BP. This is Bb_6. Make Pp_6 equal to Bb_6, and erect a perpendicular to BP at p_6. Similarly, find the total component Cc_4 of Cc_1 along CP, make Pp_4 equal to Cc_4, and erect a perpendicular to CP at p_4. These two perpendiculars intersect at p_1 giving Pp_1 as the velocity vector for P.

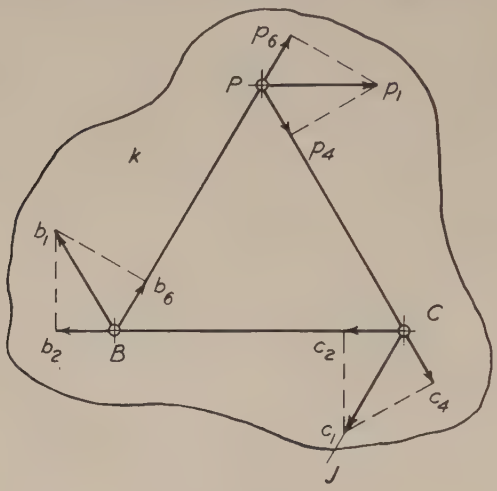

FIG. 4–5

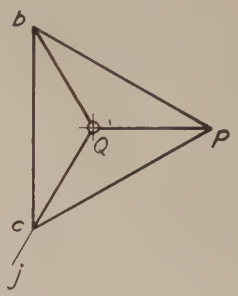

FIG. 4–6

In Fig. 4–6 the same result is obtained on the vector diagram with a pole Q. Draw Qb equal, parallel, and in the same sense as Bb_1. Draw Qj parallel to CJ. Through b draw a line perpendicular to BC meeting Qj at c. Then Qc represents the velocity of C. From b draw a line perpendicular to BP, and from c a line perpendicular to CP. These lines intersect at p, giving Qp as the vector for P.

4–5. Instantaneous Axis of Velocities. In any body having coplanar motion, except pure translation, there is a line perpendicular to the plane of motion, which at the instant has zero velocity. The motion of the whole body is equivalent to rotation about this line. Any two particles have velocities proportional to their distances from it. It is called the **instantaneous axis.** The point which represents the end view of this axis is often called the **instantaneous center.**

The location of the instantaneous axis is at the intersection of perpendiculars to the velocity vectors of any two points drawn at their origins on the space diagram. Fig. 4–7 shows the instantaneous axis I_k for piece k (the same piece as in Figs. 4–3 and 4–4) and the method of finding the velocity of C by proportion.

If the two particles A and B on the same body k (Figs. 4–8 and 4–9) have parallel velocities, the instantaneous axis I_k is at the point where a line drawn through the termini of their vectors intersects the line joining them.

To show that a point on a body k, at I_k, the intersection of lines drawn at two points perpendicular to the known directions of their velocities, has zero velocity. (See Fig. 4–10.)

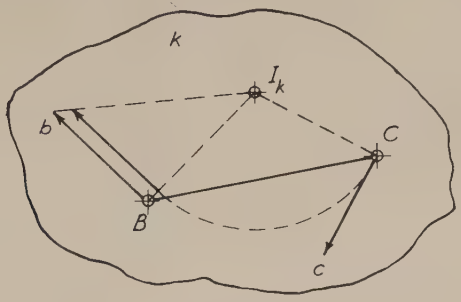

Fig. 4–7

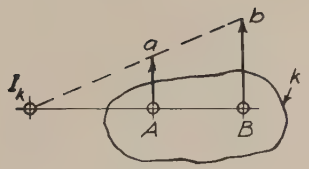

Fig. 4–8

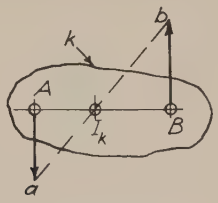

Fig. 4–9

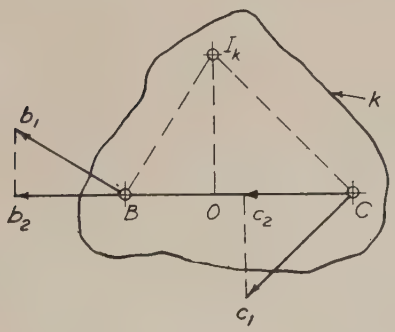

Fig. 4–10

Since CI_k is perpendicular to Cc_1 the total component of Cc_1 along CI_k is zero. Therefore every point on line CI_k on body k, if it has any velocity at all, must have a velocity perpendicular to CI_k. Similarly, every point on BI_k must have a velocity perpendicular to BI_k if it has any velocity. But I_k is common to both lines. Hence, since its velocity can have no total component along either CI_k or BI_k, its velocity must be zero.

To show that $v_C : v_B = I_kC : I_kB$ (Fig. 4–10).

Since Bb_1 and Cc_1 are the vectors for B and C respectively,

$$\frac{v_C}{v_B} = \frac{Cc_1}{Bb_1}$$

From I_k draw I_kO perpendicular to line BC.

Then triangle BI_kO is similar to triangle b_1Bb_2, and triangle CI_kO is similar to triangle c_1Cc_2.

Hence $$\frac{Bb_1}{I_kB} = \frac{Bb_2}{I_kO}, \quad \text{and} \quad \frac{Cc_1}{I_kC} = \frac{Cc_2}{I_kO}$$

But $$Cc_2 = Bb_2$$

Therefore $$\frac{Cc_1}{I_kC} = \frac{Bb_1}{I_kB} \quad \text{or} \quad \frac{Cc_1}{Bb_1} = \frac{I_kC}{I_kB}$$

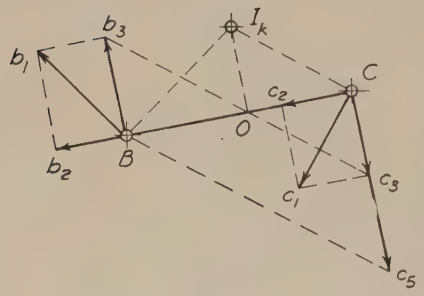

FIG. 4–11

To show that the angular speed of a body is equal to the relative velocity of any two points on the body divided by the distance between them. Referring to Fig. 4–11, it has been shown that Bb_3 and Cc_3 are the velocities of B and C respectively, relative to O. Then the velocity of C relative to B is equal to the vector difference of Cc_3 and Bb_3, or Cc_5. Also the velocity of B relative to C is of the same magnitude as Cc_5 with opposite sense.

The angular speed of a rigid body is the time rate at which any line on that body is changing its direction and is equal to the velocity of any point on the body divided by the distance of the point from the axis of rotation I_k. Therefore

$$\omega_k = \frac{Bb_1}{I_kB} = \frac{Cc_1}{I_kC}$$

From the similar triangles Bb_1b_2 and BI_kO

$$\frac{Bb_1}{I_kB} = \frac{b_1b_2}{BO} = \frac{Bb_3}{BO}$$

Therefore $$\omega_k = \frac{Bb_3}{BO}$$

In similar manner $$\omega_k = \frac{Cc_3}{CO}$$

Also, since triangle BCc_5 is similar to triangle OCc_3

$$\omega_k = \frac{Cc_5}{BC}$$

4–6. Periodic Center of Motion. It very often happens that two positions of a line are known, as AB and A_1B_1 (Fig. 4–12) moving in the plane of the paper, and it is required to find an axis about which this line could revolve to occupy the two given positions. Draw AA_1 and BB_1, and find the intersection O of the perpendiculars drawn at their middle points. Thus AB can be brought to the position A_1B_1 by revolving it about an axis through O perpendicular to the plane of the paper, the paths of A and B being arcs of circles drawn from O as a center, and with radii equal to OA and OB respectively.

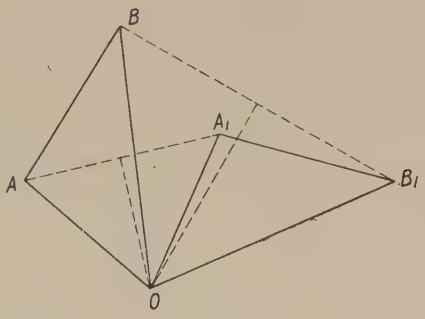

FIG. 4–12

When the two positions of AB are taken infinitely near each other, O becomes the instantaneous axis.

4–7. Velocity Vector Image. *The termini of the velocity vectors of three or more points in the same plane in a rigid body form the vertices of a polygon similar to the polygon formed by the points themselves on the space diagram.*

The above statement is true whether the vectors are drawn on the space diagram or from a common pole.

Proof. In Fig. 4–13 the points B, C, and P have velocity vectors Bb_1, Cc_1, and Pp_1, respectively, found as explained for Fig. 4–5. To show that triangle $b_1c_1p_1$ is similar to triangle BCP. Find the instantaneous axis I and draw IB, IC, and IP; also join I to b_1, c_1, and p_1. It has already been shown that Bb_1, Cc_1, and Pp_1 are in the same ratio as IB, IP, and IC. Hence since the triangles IBb_1, ICc_1, and IPp_1 are all right triangles they are similar, all the angles marked β are equal, and Ib_1, Ip_1, and Ic_1 are in the same ratio as IB, IC, and IP. In the triangles BIP and b_1Ip_1 each of the angles BIP and b_1Ip_1 is equal to $\beta + \alpha$. Therefore these triangles are similar. In like manner triangle

PIC is similar to triangle p_1Ic_1, and BIC is similar to b_1Ic_1. Hence triangle BPC is similar to triangle $b_1p_1c_1$.

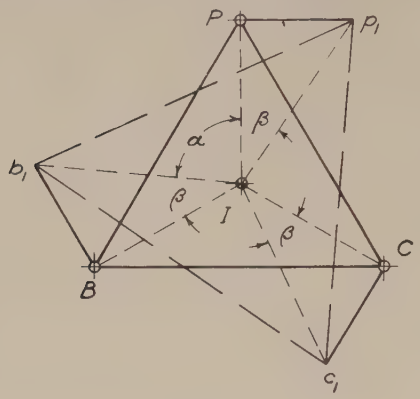

Fig. 4–13

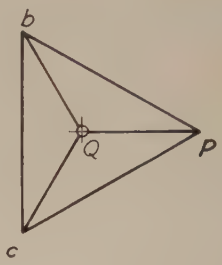

Fig. 4–14

Again in Fig. 4–14 Qb and Qc are perpendicular respectively to IB and IC (of Fig. 4–13). Therefore the angle bQc is equal to angle BIC.

Also, as already seen

$$\frac{Qb}{Qc} = \frac{IB}{IC}$$

Therefore triangles bQc and BIC are similar. In like manner bQp and cQp are respectively similar to BIP and CIP. Hence triangle bcp is similar to triangle BCP.

The above principle is often stated thus: *The termini of the velocity vectors for a series of points on a rigid body having coplanar motion form the image of the space diagram of the points themselves.*

4–8. Velocities of Bodies Connected by Pin Joints. When two bodies are connected by a pin joint (cylindrical pair of elements allowing relative motion to be turning only) the axis of the cylindrical pair, or pin and bearing, may be treated as a line common to both bodies, and both bodies have the same velocity at this line. The solution of problems involving two or more bodies connected by pin joints consists for the most part in the proper application of the law stated at the beginning of § 4–4 and the principle, just stated, that the axis of the connecting pin is a line common to both bodies.

Since we are dealing with coplanar motion and all lines perpendicular to the plane of the paper show as points they may be referred to as such; planes perpendicular to the paper appear as lines and may be referred to as such.

A line may also be used to represent the body of which it is a part. A good example is the simple four-bar linkage (see § 1–19).

In Fig. 4–15 the lines AB, BC, CD, DA represent the links of a four-bar linkage. Let A and D be the fixed axes. Then AD is the line of centers, AB and DC the cranks, and BC the coupler or connecting rod. (See Fig. 1–17.) For convenience the bodies constituting the four links

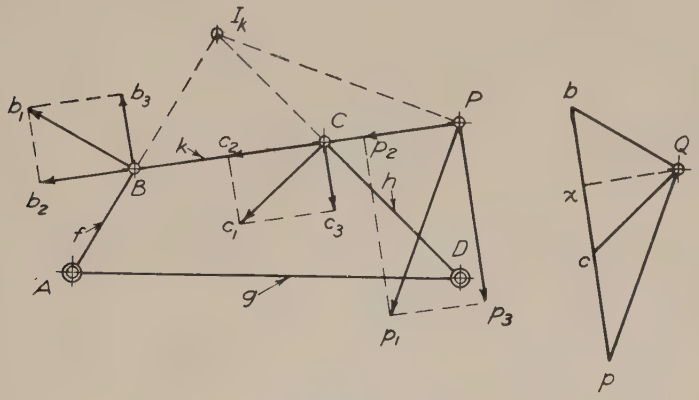

Fig. 4–15

will be designated by the letters *fkhg* placed on the lines of connection AB, BC, CD, DA, respectively. Since B is constrained by the crank f to move in a circle about A with radius AB its velocity must be perpendicular to AB. Similarly, the velocity of C must be perpendicular to DC.

Let it be assumed that the angular speed of f is one radian per second, left handed (abbreviated thus, $\omega_f = 1$ rad. per sec L.H.). Required to draw the velocity vectors for points B and C and also for a point P on body k, located on line BC extended. Let v_B, v_C, and v_P equal the velocity of B, C, and P respectively. Then

$$v_B = \omega_f \cdot AB \quad \text{(See § 2–24)}$$

Since $\omega_f = 1$,

$$v_B = AB$$

Therefore the velocity vector for B will be Bb_1 perpendicular to AB, of a length equal to AB, and with sense toward the left. Since the direction of the velocity of C must be perpendicular to DC the vector for C may be found as in § 4–4 in connection with Fig. 4–2 or Fig. 4–5.

To find the vector for P. First find the instantaneous axis of k by extending the center lines of the cranks AB and DC to intersect at I_k. Since, for the instant, all points on k are turning about I_k the velocity vector for P must be perpendicular to the line I_kP. The total component of the velocity of P along PCB must be equal to Bb_2. Hence make Pp_2 equal to Bb_2 and erect a perpendicular to intersect the perpendicular to I_kP at p_1. This gives Pp_1 as the vector for the velocity of P. Thus we have Bb_1, Cc_1, and Pp_1 representing the velocities of B, C, and P, respectively. The diagram at the right is the vector polygon with vectors Bb_1 and Cc_1 and Pp_1 drawn from a common origin or pole Q. The line bcp connecting b, c, and p is perpendicular to BC; bc represents the velocity of c relative to b, cp that of p relative to c, and bp that of P relative to B. The dotted line Qx is the same as Bb_2 and Cc_2 and Pp_2. It should be noted that in accordance with the fact stated in § 4–7 the points b_1, c_1, and p_1 must be on a straight line, since B, C, and P are on a straight line. It also follows that b_3, c_3, and p_3 are on a straight line.

4–9. Angular Speed of Links in a Four-Bar Linkage. The following general law furnishes a simple means of determining the ratio of the angular speeds of the cranks of a four-bar linkage and also the angular speed of the coupler in terms of that of one of the cranks.

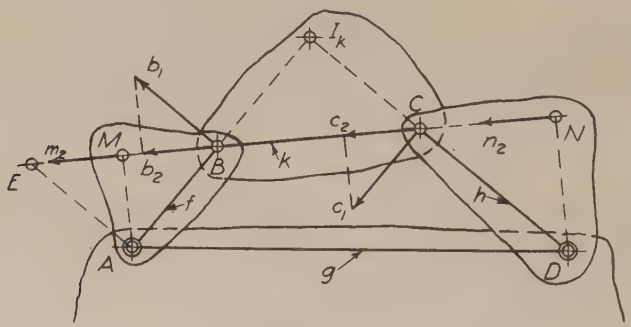

FIG. 4–16

Referring to Fig. 4–16, let ω_f and ω_h be the angular speeds of cranks AB and DC respectively while ω_k is the angular speed of the coupler BC.

1. *The angular speeds of the cranks are in the inverse ratio of the lengths of the perpendiculars AM and DN drawn from the fixed axes to the center line of the coupler.*

That is

$$\omega_h = \omega_f \cdot \frac{AM}{DN} \tag{3}$$

Also, the angular speeds of the cranks are inversely as the lengths of any two parallel lines drawn from the fixed axes to the center line of the coupler, and inversely as the segments into which the center line of the coupler divides the line of centers.

2. *The angular speed of the coupler may be found by drawing through the axis A a line parallel to the center line of the crank DC. This line intersects the center line of the coupler at E. Then the angular speed of the coupler is equal to the angular speed of AB multiplied by* $\frac{BE}{BC}$.

That is
$$\omega_k = \omega_f \cdot \frac{BE}{BC} \tag{4}$$

Proof of 1. Assume a velocity Bb_1 for B and find the velocity Cc_1 for C as in the preceding article. Then each of these velocities has a total component along CB equal to Bb_2. This total component applies to all three of the pieces f, k, and h since B is common to f and k and C is common to k and h. From A draw AM perpendicular to the line CB meeting this line at M. M is now a point on piece f whose total velocity component along CB is Mm_2 equal to Bb_2. But the direction of the velocity of M must be along CB since AM is perpendicular to CB. Therefore Mm_2 is the true velocity of M and $Mm_2 = \omega_f \cdot AM$, or

$$\omega_f = \frac{Mm_2}{AM} \tag{5}$$

Similarly, drawing DN perpendicular to CB

$$\omega_h = \frac{Nn_2}{DN} \tag{6}$$

Hence, since $Nn_2 = Mm_2$, if we divide equation (6) by equation (5) we get

$$\frac{\omega_h}{\omega_f} = \frac{AM}{DN} \quad \text{or} \quad \omega_h = \omega_f \cdot \frac{AM}{DN}$$

which is the same as equation (3).

If any two parallel lines are drawn from A and D to CB they will form similar right triangles with AM and DN and will be in the same ratio. Also if CB is extended to intersect DA the segments into which it divides DA will be in the same ratio as AM and DN. This will be discussed in more detail in § 4–10.

Proof of 2. Find the instantaneous axis I_k for the coupler k. Then a point on k at I_k has zero velocity (see § 4–5) and

$$\omega_k = \frac{Bb_1}{I_kB}$$

also

$$\omega_f = \frac{Bb_1}{AB} \quad \text{or} \quad \frac{\omega_k}{\omega_f} = \frac{AB}{I_kB}$$

Draw AE parallel to DC; then triangle ABE is similar to triangle I_kBC. Therefore

$$\frac{BE}{BC} = \frac{AB}{I_kB}$$

and hence

$$\frac{\omega_k}{\omega_f} = \frac{BE}{BC} \quad \text{or} \quad \omega_k = \omega_f \cdot \frac{BE}{BC}$$

which is the same as equation (4).

4–10. The Relative Instantaneous Axis or Centro of two bodies is that line which is common to both bodies, both in location and velocity. It is the line which would be the instantaneous axis of one if the other were fixed. It may also be defined as the axis about which one of the bodies is turning relative to the other. Since the axis of a pin joint connecting two bodies is a line common to both bodies in location and velocity, this axis is the centro of two such bodies.

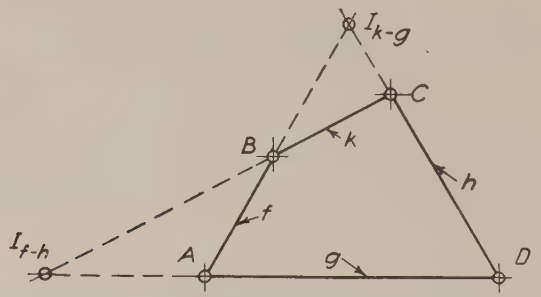

Fig. 4–17

In the four-bar linkage each pair of links has its centro as shown in Fig. 4–17. If g is the fixed link the instantaneous axis of k is at I_{kg}, and if k is the fixed link the instantaneous axis of g is at the same place. Hence I_{kg} is the centro of k and g. Similarly I_{fh} is the centro of f and h. A is the centro of f and g, B of f and k, C of k and h, and D of h and g.

Referring to Fig. 4–18: With axes A and D fixed, the following

demonstration will show that I_{fh}, the intersection of the line of centers DA and the center line of the coupler CB, is the centro of the cranks f and h. In other words, we are to show that a point F on link f and a point H on link h, both coincident with I_{fh}, have identical velocities.

Assume a velocity Bb_1 for B. Then from § 4–4 all points on f and h (as well as k) which in the drawing lie on CB or CB produced have total components along CB equal to Bb_2. Therefore Ff_2 and Hh_2 are equal. The resultant velocities of F and H are both perpendicular to DA. Hence these velocities Ff_1 and Hh_1 are identical. Furthermore

$$\omega_f = \frac{Ff_1}{AI_{fh}} \quad \text{and} \quad \omega_h = \frac{Hh_1}{DI_{fh}}$$

and since $Ff_1 = Hh_1$ it follows that

$$\frac{\omega_h}{\omega_f} = \frac{AI_{fh}}{DI_{fh}} \tag{7}$$

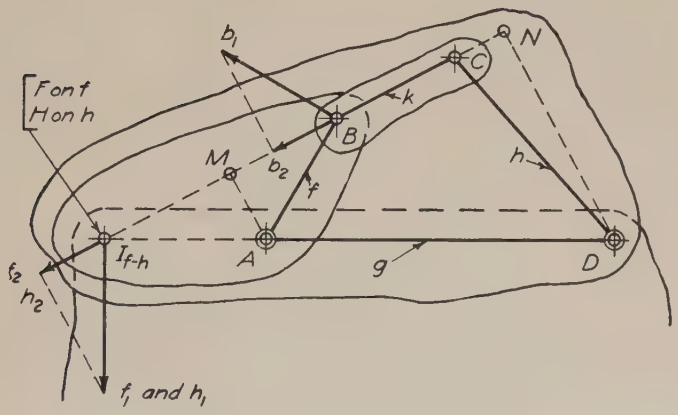

FIG. 4–18

Also since the triangles MAI_{fh} and NDI_{fh} are similar it follows from equation (7) that

$$\frac{\omega_h}{\omega_f} = \frac{AM}{DN} \tag{8}$$

4–11. Points of Identical Velocities. Each of the moving links of a four-bar linkage has on it somewhere a point which has a velocity equal in magnitude, direction, and sense, to that of any given point on any one of the other links. Such a point is sometimes called the **phorograph** of the given point. The name **image** is also used. The link upon which

the phorograph or image of a point is to be found is the **phorograph link** or **image link**.

In Fig. 4–19 let it be required to find on link f a point whose velocity is identical with that of C. Draw through A a line parallel to DC. The point E where this line intersects CB is the required point (that is, the image or phorograph of C on link f).

Proof. Since the velocity of E is perpendicular to AE it must be parallel to Cc_1, the velocity of C; and since the total components Ee_2 and Cc_2 along CB must be equal the triangles Ee_2e_1 and Cc_2c_1 are equal and Ee_1 equals Cc_1.

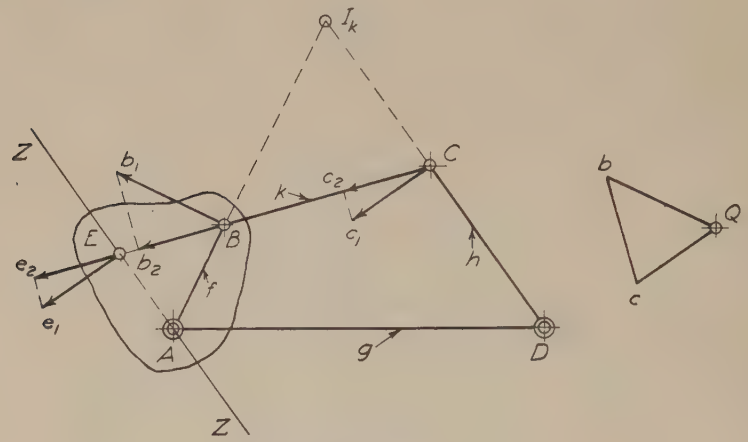

FIG. 4–19

The following relation is also a very convenient one:

If the scale of vectors is such that Bb_1 is equal in length to AB then the length of AE is equal to Cc_1 and the length of BE is equal to the length of the vector representing the velocity of C relative to B.

Proof. Let v_B, v_C, and $v_C{}^B$ be the velocities of B, C, and C relative to B respectively, and let ω_f be the angular speed of the piece f. Then

$$v_B = \omega_f \cdot AB$$

Choose a scale such that $\omega_f \cdot AB = AB$, which is equivalent to assuming $\omega_f = 1$ radian per unit of time. Draw the vector polygon with pole Q as shown at the right. Then Qb is equal in length to AB and perpendicular to AB. Qc is equal to Cc_1 and perpendicular to DC and therefore perpendicular to AE. Therefore angle bQc is equal to angle BAE. Also, since bc is perpendicular to BC, angle cbQ is equal to angle EBA. Hence triangle ABE is equal to triangle Qbc. But bc is the velocity of C

relative to B, for $\omega_f = 1$ radian per unit of time (assuming that the linkage is drawn full size). Therefore BE also represents the velocity of C relative to B. In other words, the triangle ABE is the same velocity polygon as Qbc turned through 90°. To interpret it, still assuming the linkage full size, the following relations are used:

$$v_B = \omega_f \cdot AB$$
$$v_C = \omega_f \cdot AE$$
$$v_C{}^B = \omega_f \cdot BE$$

4–12. Example 2. Linkage with More Than Four Links. In Fig. 4–20 is shown the construction for finding the velocities of certain points, and the instantaneous axes of the two "floating" members of a determinate linkage containing more than four links. The cranks f and h turn about the axes A and D respectively; A and D are supported by the fixed piece g. Piece m is attached to h by a pin joint at S and to f through the intermediate link k with pin joints at C and B. Cranks f and h are driven independently at such angular speeds that the velocity vectors of B and S are Bb_1 and Ss_1 respectively. It is required to find the instantaneous axis of m and of k; also the velocity vector for C.

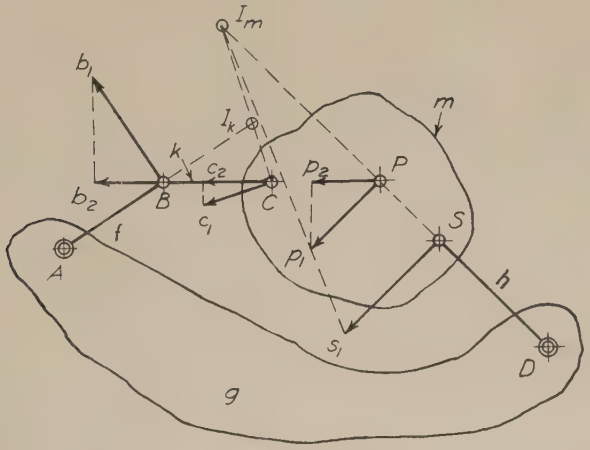

FIG. 4–20

Solution. Find the total component Bb_2 along CB. Then C must have the same total component Cc_2 along CB. But as we do not know the direction of the velocity of C, we cannot yet find it. However, we do know the velocity of one point on m, namely, the point S. Accordingly the instantaneous axis of m must be somewhere on a line through S perpendicular to Ss_1, that is, on DS extended. Consequently every point on m which lies along the line DS has its velocity perpendicular to DS. Also every point on m which lies along BC has a total component in the direction CB equal to Cc_2. Then if the point P is selected, on m, at the intersection of BC and DS, its total component along CB is Pp_2 and its direction is perpendicular to DS.

Hence its velocity vector Pp_1 can be found. The two parallel velocity vectors Ss_1 and Pp_1 being known, the instantaneous axis I_m is found by drawing through s_1 and p_1 to intersect DS. (See § 4–5.)

The vector for C is perpendicular to I_mC, and its length Cc_1 is found by drawing c_2c_1 perpendicular to Cc_2.

The instantaneous axis of k is at I_k where AB extended intersects I_mC.

4–13. Pure Rolling Contact. If one body is in contact with another body along a line and the relative motion is such that no slipping occurs between coincident points on the line of contact the bodies are said to be in pure rolling contact. The surfaces may be of various forms provided the relation between them is such that the conditions are proper for relative motion to take place without slipping. *The fundamental condition is that every point on one body which is in the line of contact must have the same velocity as the coincident point on the other body.*

For present purposes the following cases may be considered as typical.

1. A circular cylinder and a plane surface.
2. Two circular cylinders.
3. A right circular cone and a plane surface.
4. Two right circular cones.

In all cases one of the bodies may be fixed or both may be moving.

4–14. Circular Cylinder Rolling on a Fixed Surface. In Fig. 4–21 let the circular cylinder k, of radius R_k, roll without slip on the fixed plane surface g. The velocity vector for the axis C is Cc_1. To deter-

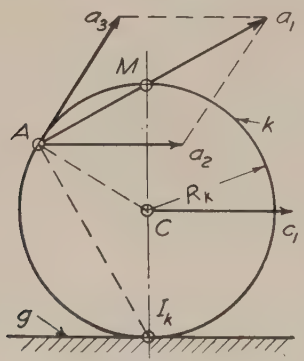

Fig. 4–21

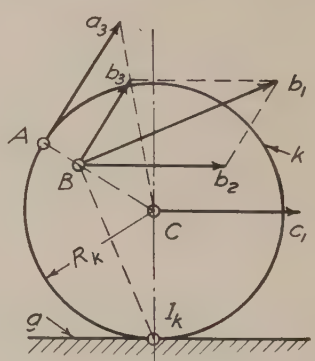

Fig. 4–22

mine the vector for any point A on the circumference of the cylinder. Since there can be no slipping at the line of tangency of k and g, this line, appearing in the figure as the point, I_k, is the instantaneous axis of k.

Then the velocity Aa_1 of A must be perpendicular to I_kA and of such magnitude that

$$\frac{Aa_1}{Cc_1} = \frac{I_kA}{I_kC} = \frac{I_kA}{R_k}$$

The vector Aa_1 might also be obtained by giving A a translation component Aa_2 equal and parallel to Cc_1 and a rotation component relative to C equal to Aa_3, equal also to Cc_1, and perpendicular to CA. The vector sum of these two is Aa_1.

To show that Aa_3 is equal to Cc_1, let ω_k be the angular speed of k, v_C be the velocity of C ($= Cc_1$), $v_A{}^C$ the velocity of A relative to C ($= Aa_3$). Then

$$\omega_k = \frac{v_C}{R_k}$$

Now from § 4–5

$$\omega_k = \frac{v_A{}^C}{R_k}$$

Therefore

$$\frac{v_C}{R_k} = \frac{v_A{}^C}{R_k} \quad \text{or} \quad v_A{}^C = v_C \tag{9}$$

It should be noted that since A is on the circumference of the cylinder the vector Aa_1 lies along a line passing through the end of the diameter I_kCM because I_kAM is a right triangle.

If the surface g were curved, all the preceding discussion would apply equally well.

To find the velocity of a point B which is not on the circumference. See Fig. 4–22. Given the velocity $v_C = Cc_1$; to find the velocity v_B of any point B. Here as in the preceding case the vector Bb_1 is the vector sum of a component equal and parallel to Cc_1 and the component relative to C. That is, Bb_1 is the vector sum of Bb_2 and Bb_3. To find Bb_3, extend CB to meet the circumference at A and draw Aa_3 perpendicular to CA and equal to Cc_1. Then Bb_3 is found by proportion.

The vector Bb_1 is of course perpendicular to I_kB.

4–15. Circular Cylinder Rolling on a Moving Plane Surface. In Fig. 4–23 let the conditions be the same as in Fig. 4–21 except that the body g has rectilinear motion with velocity Pp_1. The instantaneous axis of k is found, as in Fig. 4–8, by drawing through c_1 and p_1 to intersect CP at I_k. The velocity Aa_1 of A may be found by drawing Aa_3 perpendicular to CA and equal to the vector difference of Cc_1 and Pp_1, then adding vectorially, to Aa_3, Aa_2 which is equal and parallel to Cc_1,

thus getting Aa_1. This resultant Aa_1 is perpendicular to I_kA and

$$\frac{Aa_1}{Cc_1} = \frac{I_kA}{I_kC}$$

The angular speed of k is $\dfrac{Cc_1 \rightleftarrows Pp_1}{R_k}$.

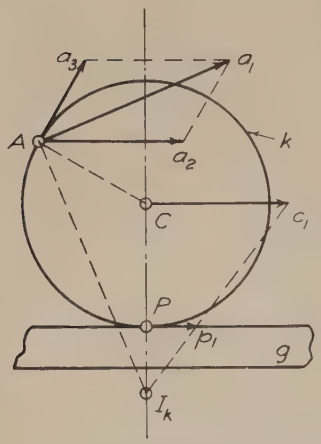

FIG. 4–23

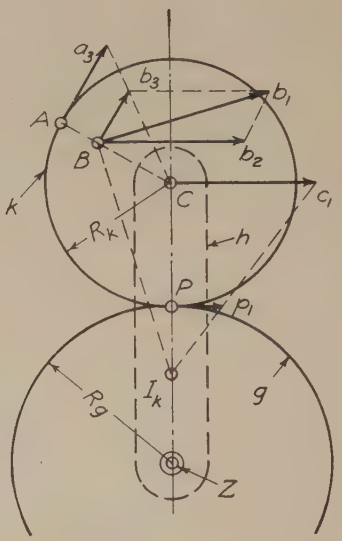

FIG. 4–24

4–16. Cylinder Rolling on a Turning Cylinder. In Fig. 4–24 the axis of the cylinder k is carried by the arm h which may turn about the fixed axis Z. Cylinder g also turns on the same axis Z, h and g being free to turn at different speeds, ω_h and ω_g respectively. k and g roll together without slip at point P. Given ω_h and ω_g; to find I_k, the instantaneous axis of k, and the velocity of any point B on k.

First, determine v_C and v_P and draw their vectors.

$$v_C = \omega_h (R_g + R_k) = Cc_1$$
$$v_P = \omega_g \cdot R_g = Pp_1$$

From this point on the solution is the same as for the cases in the preceding articles.

4–17. Example 3. Curvilinear Translation. In Fig. 4–25 the conditions are the same as in Fig. 4–24 except that the relation between ω_h and ω_g is such that $v_P = v_C$. From the expressions for v_P and v_C given in § 4–16 we get

$$\omega_h(R_g + R_k) = \omega_g R_g \quad \text{or} \quad \frac{\omega_g}{\omega_h} = \frac{R_g + R_k}{R_g}$$

Since Cc_1 and Pp_1 representing v_C and v_P respectively are equal and parallel, the instantaneous axis of k is at an infinite distance and all points on k have the same velocity. The axis C is compelled by the arm h to move in a circle about Z, and all other points in k will move in curved paths, the form of the curve depending upon

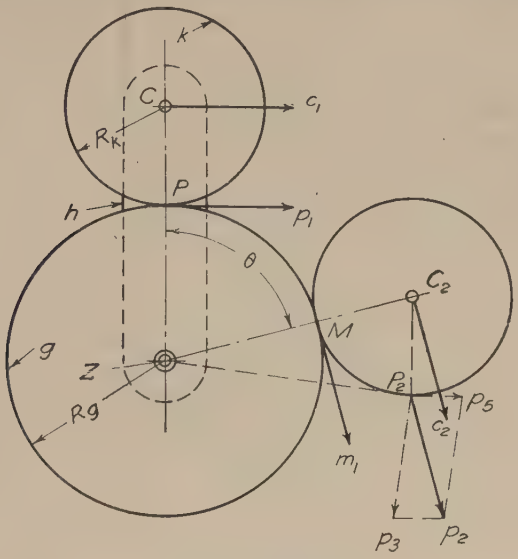

FIG. 4–25

the position of the point relative to C. All points will continue to move with velocities each equal and parallel to that of C, and k will go through its cycle of motion with zero angular speed at all times.

At the right, k is shown in a position where the arm h has turned through an angle θ, C being at C_2 and P at P_2. The velocity of P_2 is P_2p_2, still equal and parallel to that of C_2. P_2p_2 may be thought of as consisting of two components: P_2p_3, which is a component of turning about Z with h; and P_2p_5, which is a component of turning about C_2 *relative* to h.

4–18. Bodies Connected by a Sliding Pair. See Fig. 4–26. The crank f turns about the fixed axis B at such an angular speed that the velocity of A is as represented by Aa_1. At A on f is pivoted a block contained in the slot in the piece h, which turns about the fixed axis C. The axis A of the pin which connects the block to f is a line common to f and h. Let A denote this line considered as a line on f, and P the coincident line on h. In other words, in the plane of the paper are two coincident points A and P, A being on f and turning about B and P being on h and turning about C. The velocity of A is known, and the problem becomes that of finding the velocity of P. Let v_A and v_P represent the velocities of A and P respectively. Since the block can move relative to the slot *only in a direction parallel to the center line*

YY of the slot, the total components of v_A and v_P perpendicular to this center line must be equal. Resolve Aa_1 into its components Aa_3 along YY and Aa_2 along XX perpendicular to YY. The vector for v_P must

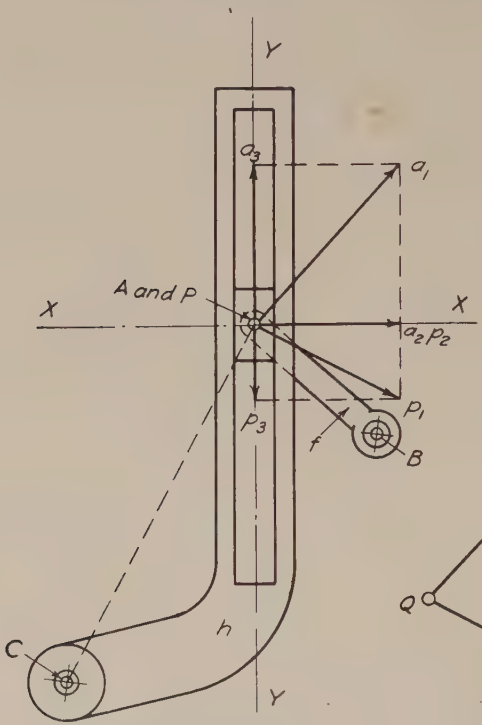

FIG. 4–26

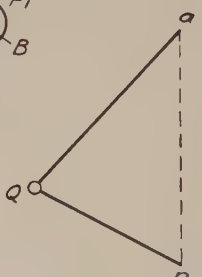

FIG. 4–27

be perpendicular to CP. Therefore since Pp_2 coincides with Aa_2 continue the line a_1a_2 (which of course is parallel to YY) until it intersects the perpendicular Pp_1 at p_1. Then Pp_1 is the vector for v_P. The angular speed, ω_h, of h is found from the equation

$$\omega_h = \frac{Pp_1}{CP}$$

Since Aa_1 has a total component along YY equal to Aa_3 and Pp_1 a total component Pp_3 the velocity of A relative to P is $v_A{}^P = Aa_3 \rightleftarrows Pp_3$. In this case Aa_3 and Pp_3 have opposite senses; hence their vector difference is equal to their arithmetical sum.

In Fig. 4–27 the same problem is solved on the vector polygon with pole Q. Qa is equal and parallel to Aa_1, Qp is drawn perpendicular to CP, and p is found by drawing ap through a parallel to YY intersecting

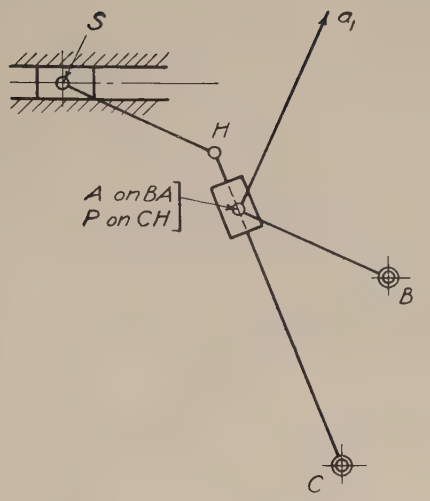

FIG. 4–28

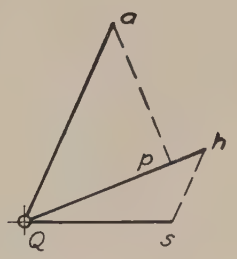

FIG. 4–29

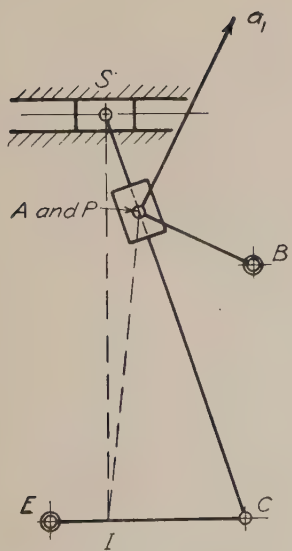

FIG. 4–30

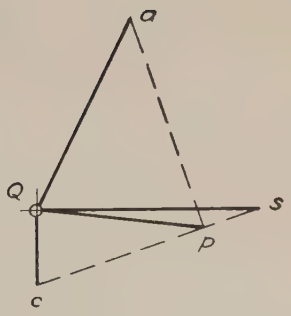

FIG. 4–31

Qp at p. The line pa represents the velocity of A relative to P, and the same line read in the opposite sense, that is ap, represents the velocity of P relative to A. This relative velocity is the rate of sliding of the block in the slot.

The line XX, perpendicular to the center line of the slot, is the line of connection between A and P. In other words, it is the coupler of the equivalent four-bar linkage.

4–19. Additional Examples. The following examples will serve to illustrate still further the application of the foregoing principles to the solution of velocity problems.

Example 4. In Fig. 4–28: given the velocity vector Aa_1; to find vectors for P, H, and S. The vector polygon is shown in Fig. 4–29. From pole Q, Qa is drawn equal and parallel to Aa_1. ap is parallel to CH, Qp perpendicular to CH meeting ap at p, $\frac{Qh}{Qp} = \frac{CH}{CP}$, hs is perpendicular to HS, Qs is parallel to the path of S meeting hs at s.

Example 5. In Fig. 4–30: given vector Aa_1; to find vectors for P, C, and S. The vector polygon is shown in Fig. 4–31. Qa is equal and parallel to Aa_1. Qp is perpendicular to IP (I being the instantaneous axis of CS); ap is parallel to CS, meeting Qp at p. Through p draw cs perpendicular to CS. Qs is parallel to the path of S. Qc is perpendicular to EC. If I falls off the paper the direction of IP may be found by a proportional construction.

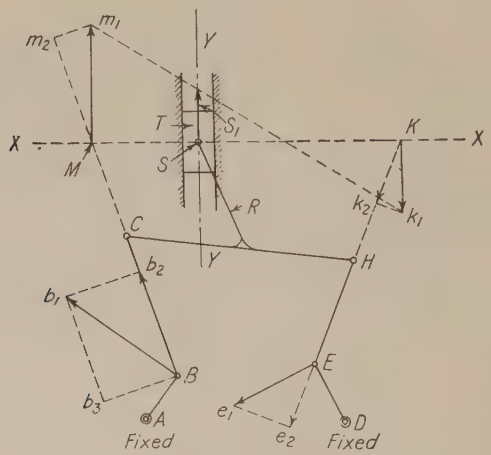

FIG. 4–32

Example 6. In Fig. 4–32: The block T slides in fixed guides. The rigid piece R is attached to T by a pin joint at S. The crank pin B is connected to R by the rod BC, and the crank pin E is connected to R by the rod EH. Bb_1 and Ee_1 represent the velocities of B and E respectively. Required to find the instantaneous axis of R and the velocity of S.

Solution. Since the point S, which is common to T and R, is compelled by the guides to move in the line YY, the instantaneous axis of R must lie somewhere on the line XX, drawn perpendicular to YY at S. If the velocity Bb_1 is resolved into components Bb_3 and Bb_2 perpendicular to and along BC, then the total component of the velocity of C along the line BC will be equal to Bb_2. Since the direction in which C is moving is not known, its velocity cannot yet be found. However, C is a point common to BC and to R. Hence any point on R which lies on the line BC or BC produced must have a velocity such that its total component along BC will be equal to that of C, that is, equal to Bb_2. Now, if M, the point of intersection of BC and XX, is considered as a point on R, the velocity of M must be perpendicular to XX, and the length of the line representing its velocity may be found by laying off Mm_2 equal to Bb_2 and drawing a line perpendicular to it at m_2. This line intersects at m_1 the line which indicates the direction of M; therefore Mm_1 represents the velocity of M. In a similar way Kk_1 may be found to represent the velocity of another point K on R. Since Mm_1 and Kk_1 are parallel the instantaneous axis of R will be where a line joining m_1 and k_1 intersects XX, and the velocity of S will be Ss_1.

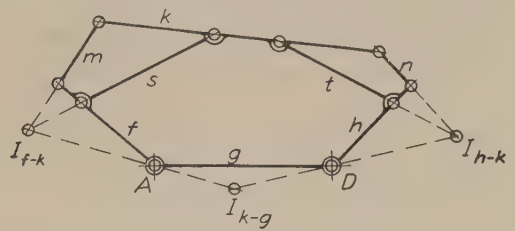

FIG. 4–33

Example 7. Given the linkage shown in Fig. 4–33 with the link g fixed; to find the instantaneous axis of k.

Solution. Find the centro I_{fk} of f and k at the intersection of links m and s. Find the centro I_{hk} of h and k at the intersection of n and t. Since I_{fk} is common to k and f both in position and velocity it must have a velocity perpendicular to $I_{fk}A$. Hence the instantaneous axis of k must be somewhere on $I_{fk}A$. Similarly the instantaneous axis of k must be somewhere on $I_{hk}D$. Therefore it must be at I_{kg}, the intersection of $I_{fk}A$ and $I_{hk}D$.

4–20. Components of Motion about Two Axes. The motion of any rigid body may be considered as being made up of rotation about a secondary axis, combined with rotation of the secondary axis about a primary or fixed axis. An equivalent statement is: any point on the body has components of rotation about two axes simultaneously. This idea has been suggested in § 4–17.

Either or both of the axes may be permanent or instantaneous, and either of the component motions may have any value, including zero.

There are three distinct cases:

Case I. The axes parallel.

(*a*) Body turning about a fixed axis. Here the axes coincide, or the speed about one of them is zero.

(*b*) Epicyclic motion. Body turning about an axis C while C turns about another axis Z, the axes being at a finite distance apart and both angular speeds being something other than zero.

(*c*) An axis having rectilinear motion. Body turning about a secondary axis C while C moves in a straight line, that is, about a primary axis Z infinitely distant.

Case II. The axes intersecting.

Case III. The axes neither parallel nor intersecting.

Both Cases II and III may have subdivisions corresponding to those given for Case I.

In Cases I and II, a true instantaneous axis for the body can be found. In Case III, no true instantaneous axis exists, but an axis may be found about which helical motion takes place for the instant, that is, if the velocities of any two or more points are resolved into components along and about this central axis, the components along it will all be the same and the components about it will be proportional to the distances of the points from the axis.

Any body which moves in such a way that all its points move in the same plane or in parallel planes is an example of Case I. All the illustrations on the preceding pages come in this group.

Example 8. Case I (*a*). In Fig. 4–34 let the frame d be stationary and the wheel k turn about the pin whose axis is C. The position of the primary axis Z is of no importance since C does not move. The velocity of any point on k is due only to the rotation of k relative to the fixed frame d. A point A on the circumference will have a vector Aa_1 perpendicular to CA and equal to $\omega_k \cdot R_k$.

In Fig. 4–35 let k be rigidly attached to d and let d turn about axis Z with angular speed ω_d. Then the secondary axis C is of no importance since k cannot turn relative to d. The velocity of any point A is perpendicular to ZA and equal to $\omega_d \cdot ZA$.

Example 9. Case I (*b*). In Fig. 4–36 let arm d turn about Z at angular speed ω_d and body k turn relative to d at angular speed $\omega_k{}^d$. To find the instantaneous axis of k and the velocity of any point A. The component of v_A due to the whole system turning about Z is $Aa_2 = \omega_d \cdot ZA$. The component due to turning about C relative to d is $Aa_3 = \omega_k{}^d \cdot CA$. The resultant of Aa_2 and Aa_3 is $Aa_1 = v_A$. The instantaneous axis of k is at I_k where a perpendicular to Aa_1 intersects ZC. In Fig. 4–37 the instantaneous axis is found without finding the velocity of A. The principle involved in this construction is an important one.

Assume k enlarged as indicated by the dotted circle k_1 to contain a point P coincident with Z. Then the only velocity P has is that due to turning relative to d and is equal to $\omega_k{}^d \cdot CZ$ and represented by Pp_1. The velocity of C is $\omega_d \cdot CZ$ and represented by Cc_1. Join p_1 and c_1, giving I_k where p_1c_1 intersects CZ. If a cylinder k_2 of radius CI_k is rigidly attached to k and caused to roll without slip on a fixed cylinder g, C having the same velocity as before, the motion of k will be the same as before.

Example 10. In Fig. 4–38 the body k is turning at speed ω_k about the axis C which is carried by a sliding block. Cc_1 represents v_C, the velocity with which the block is

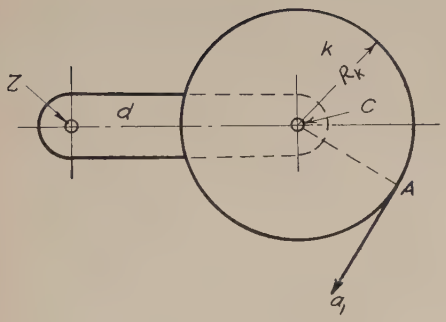

FIG. 4–34

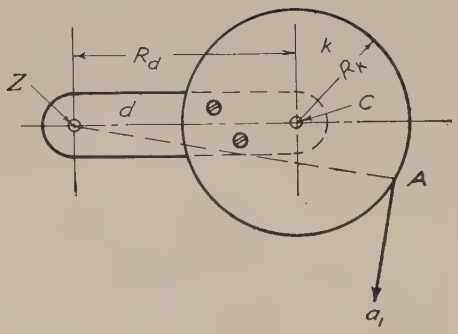

FIG. 4–35

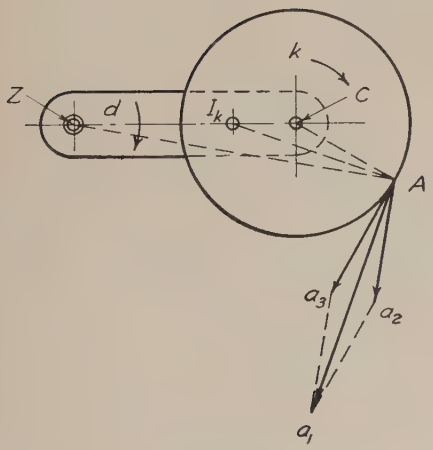

FIG. 4–36

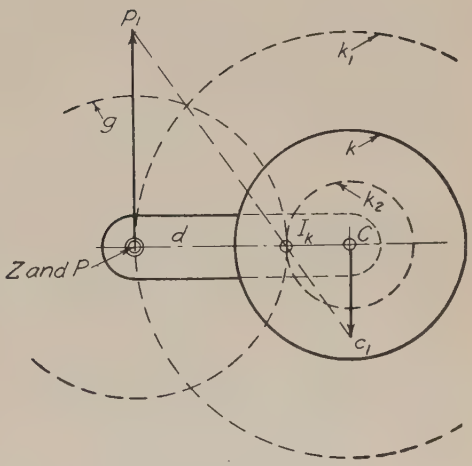

FIG. 4–37

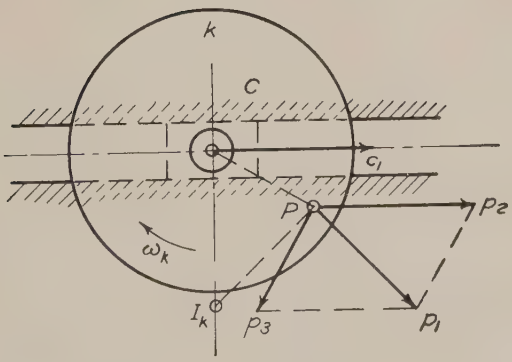

FIG. 4–38

moving; Pp_2 is equal and parallel to Cc_1; Pp_3 is perpendicular to CP and equal to $\omega_k \cdot CP$. Pp_1 is the vector for v_P and is the vector sum of Pp_2 and Pp_3. The instantaneous axis of k is at I_k where a perpendicular to Pp_1 cuts a perpendicular to Cc_1 through C. As ω_k approaches zero, I_k approaches infinity.

PROBLEMS

IV–1. A and B are particles on the same rigid body k. Aa_1 is 1 in. long and is the velocity vector for A. At the instant, B is so guided that the direction of its velocity is along XX. Find the velocity vector for B and the length, direction, and sense of the vector representing the velocity of B relative to A. Solve the problem first on the space diagram and then construct a vector polygon from a pole Q.

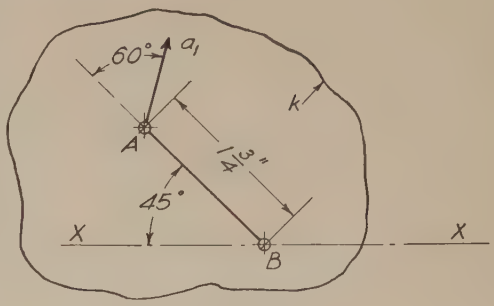

PROB. IV–1

IV–2. Points A, B, and D on the rigid body k form the vertices of an equilateral triangle with sides $1\frac{3}{4}$ in. long. Bb_1 is the velocity vector for B and is $1\frac{1}{8}$ in. long. The direction of the velocity of A is along the line ZZ. Find the vectors for A and D. Compare the triangle formed by the termini of the three vectors with the triangle formed by the points A, B, and D. Solve on the space diagram and also on a vector polygon with pole Q.

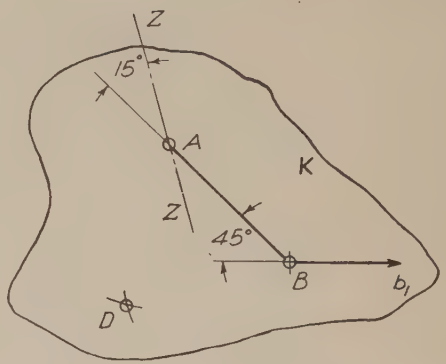

PROB. IV–2

IV–3. Using the figure for Prob. IV–2, find the instantaneous axis I_k of k and the velocity of the point on the line AB at the foot of the perpendicular let fall from I_k to AB.

IV–4. An airplane is moving due west at a speed of 100 miles per hour. The propeller blades are 5 ft long from the axis of the shaft to the tips of the blades. The propeller is turning 1800 rpm right handed as viewed from the front. Find the velocity of a point on the tip of a blade at the instant when it is vertically above the axis of the shaft. Solve graphically, and also compute. State the magnitude and direction of the velocity.

IV–5. A man riding in an automobile which is moving north at the rate of 30 miles per hour throws a ball toward the northeast so that its speed relative to the car is 44 ft per sec. Find graphically the resultant velocity of the ball.

IV–6. AB is $1\frac{1}{2}$ in.; AD is $3\frac{1}{2}$ in.; DC is $1\frac{3}{4}$ in.; BC is 2 in. A and D are fixed axes. The angular speed of crank AB is 1 radian per second. Find graphically by vectors the velocity of C and of P without reference to the instantaneous axis.

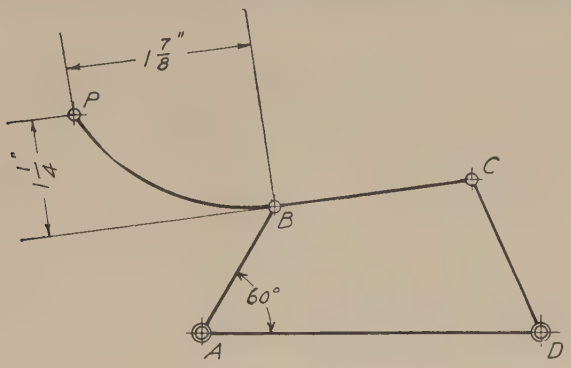

PROB. IV–6

IV–7. $AB = 2\frac{1}{2}$ in.; $DC = 3\frac{1}{2}$ in.; $AD = 5$ in.; $BC = 5$ in. AB is turning uniformly right handed at a speed of 1 radian per second. Find graphically:

1. The velocity of C when $\theta = 15°$.
2. The position and velocity of that point H on the center line of BC (produced if necessary) which has the least velocity, when $\theta = 15°$.
3. The velocity of C and of the same point H when $\theta = 60°$.
4. The value (or values) of θ when the velocity of C is zero.

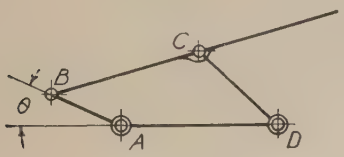

PROB. IV–7

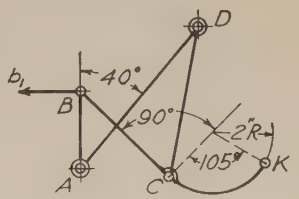

PROB. IV–8

IV–8. $AB = 2\frac{1}{2}$ in.; $AD = 6$ in.; $DC = 5$ in.; $BC = 3\frac{7}{8}$ in. BCK is a rigid piece. Bb_1 is the velocity vector for B and is 2 in. long.

1. Find the velocity vector for K.
2. Find that point on the line BCK which, at the instant, has the least velocity, and find its vector.

IV–9. Using the figure for Prob. IV–7, let the angular speed of AB = 1 radian per second. Find graphically as far as possible:

1. The velocity of C when $\theta = 30°$.
2. The point image (phorograph) on crank AB of point C and also of a point on center line DC halfway between D and C.
3. The angular speed of DC and of BC.

IV–10. A man M is walking around the circle at uniform speed of 10 ft per min. He pulls the block C along the fixed guides by a wire attached to C in such a way that its length increases at the rate of 2 ft per min. Find the position of M and C at the end of 1 min; also find the velocity of C at that time.

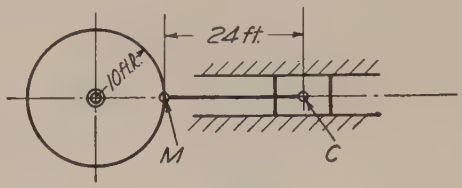

Prob. IV–10

IV–11. Velocity of A is represented by a line $1\frac{1}{4}$ in. long. Find graphically the velocity of B if B moves without slip on C. C and D turn together, and D rolls without slip on surface E.

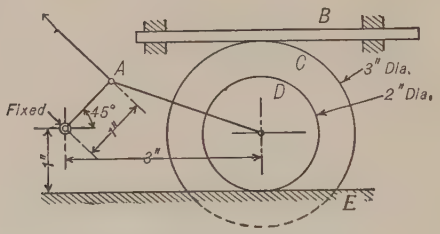

Prob. IV–11

IV–12. Drum d is 2 in. in diameter and is attached to the wheel k which is 3 in. in diameter. Wheel k rolls without slip on the straight track g. The cord is attached

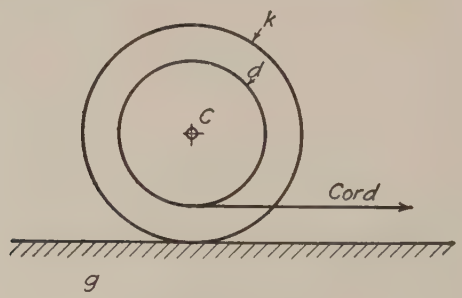

Prob. IV–12

to and wound around the drum d and drawn off parallel to g as shown with a velocity of 1 in. per sec. What is the velocity of the axis C in magnitude, direction, and sense?

At what angle with g would the cord have to be drawn off the drum in order that the velocity of C may be reversed in sense?

IV–13. Assuming no slip between the disks, and a surface velocity of disk $A = 1$ in., find the velocity of the center of disk C.

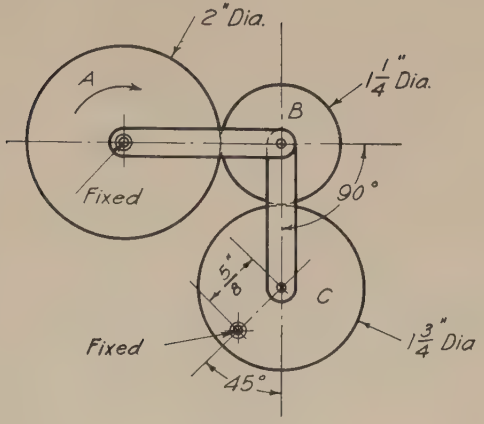

PROB. IV–13

IV–14. Given the velocity of A represented by a line 1 in. long; find the velocity of B.

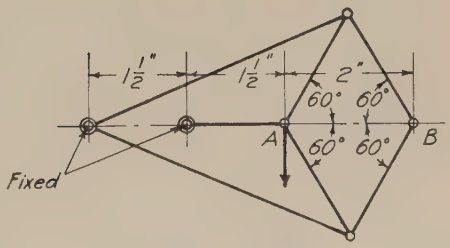

PROB. IV–14

IV–15. The slotted piece h slides in the fixed guides g. Crank AB is 1 in. long and makes an angle of 30° with XX. The velocity vector for B, the axis of the pin which connects the crank f to the block k, is 1 in. long, toward the left. Find the vector for a point on h.

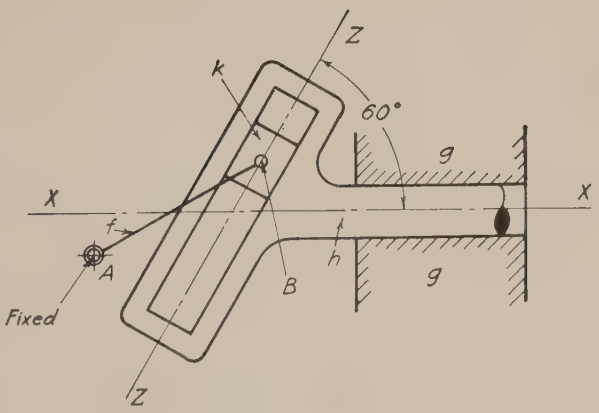

PROB. IV–15

IV–16. D and E are fixed axes. $DA = 3\frac{1}{2}$ in.; $DF = 1\frac{5}{8}$ in.; $EC = 2\frac{3}{4}$ in.; $EG = 1\frac{9}{16}$ in.; $GB = 3$ in.; $FB = 2$ in. If the velocity of A is 2 in., find the velocity of B.

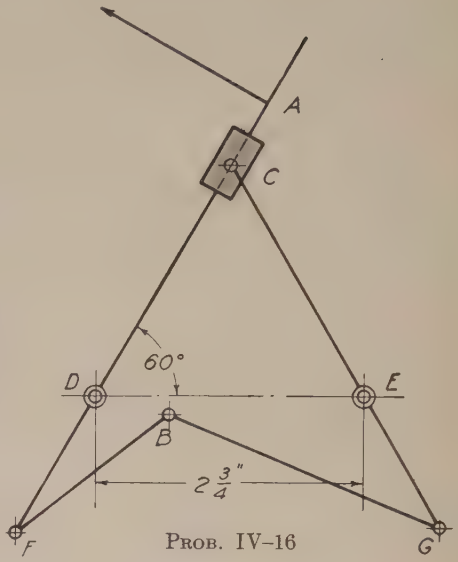

PROB. IV–16

IV–17. The crank f is turning left handed at the instant, with angular speed of $\frac{1}{2}$ radian per minute. Block b slides in fixed guides and forms a bearing for the wheel k. The wheel k rolls without slip on the fixed track g. The pin E is attached to k and is connected to crank f by the rod h. Find the velocity vector for the axis of the pin C.

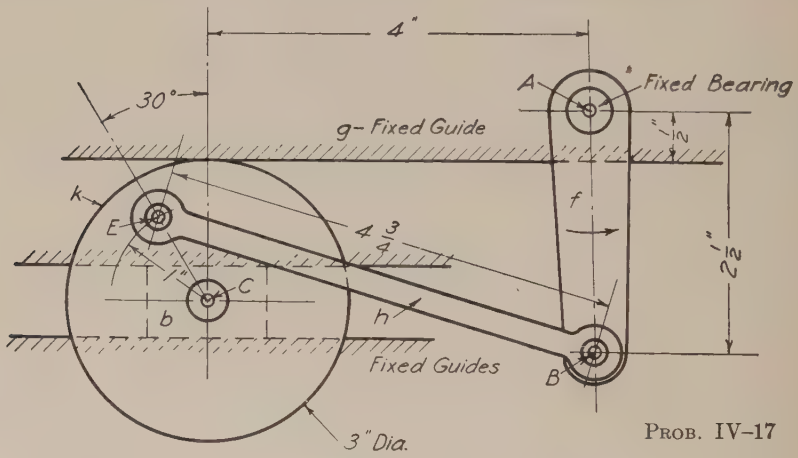

PROB. IV–17

IV–18. A, B, and C are fixed axes. The velocity of block P is represented by a line $1\frac{1}{4}$ in. long. Find the velocity of H.

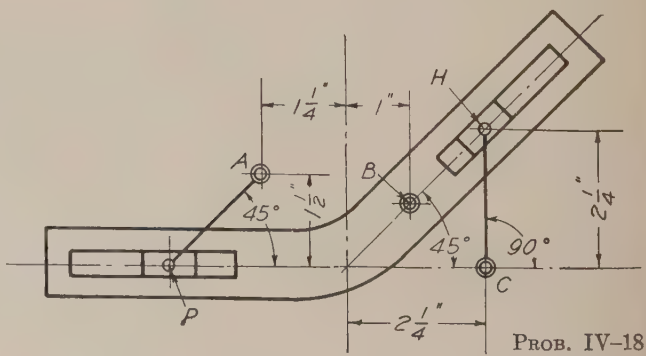

PROB. IV–18

CHAPTER V

ACCELERATION ANALYSIS

5–1. Acceleration in General. The general laws governing the acceleration of a particle were discussed in Chapter II. It is now purposed to consider the methods of determining the acceleration of points on rigid bodies by methods corresponding to those used in Chapter IV for determining velocities. The same series of cases will be taken up as was outlined for velocities in § 4–1.

5–2. Acceleration Vectors. Since acceleration is a vector quantity the principles governing the use of vectors in connection with acceleration are the same as explained in Chapter III.

5–3. Acceleration of a Point Moving in a Curved Path. It was shown in § 2–19 that linear acceleration is the time rate of change of linear velocity. This may involve change of speed or of direction, or both. That component of the acceleration which accompanies change of speed is called **tangential acceleration,** and that which accompanies change of direction is called **normal acceleration.**

5–4. Notation. The following notation will be used:

R = radius of curvature of the path at the point where a particle B is located at the instant under consideration.

v = velocity of the particle.

ω = angular speed of the radius vector $= \dfrac{v}{R}$.

α = angular acceleration of the radius vector $= \dfrac{d\omega}{dt}$.

$a_B{}^N$ = normal acceleration of point B with respect to the center of curvature of its absolute path.

$a_B{}^T$ = tangential acceleration of B with respect to the center of curvature of its absolute path.

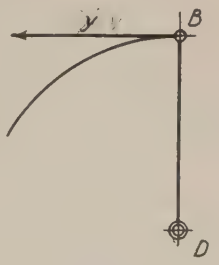

Fig. 5–1

5–5. Tangential Acceleration. In Fig. 5–1 a particle at B is moving in a curved path, the center of curvature at B being at D. The radius of curvature is $DB = R$. If the radius vector DB is turning at an angular speed ω, then the speed of B is $v = \omega \cdot R$. Differentiating this with

respect to t we get $\frac{dv}{dt} = R\frac{d\omega}{dt}$. But $\frac{dv}{dt}$ is the tangential acceleration of $B = a_B{}^T$, and $\frac{d\omega}{dt}$ is the angular acceleration of $DB = \alpha$. Hence

$$a_B{}^T = \alpha R \tag{1}$$

That is: *The tangential acceleration of a point moving in a curved path is equal to the length of the radius of curvature of the path multiplied by the angular acceleration of the line drawn from the point to the center of curvature of the path.*

5–6. Normal Acceleration. In Fig. 5–2 a point B is moving in a curved path, the radius of which, at B, is $DB = R$. Then the velocity of B is $v = \omega R$, where ω is the angular speed of the radius vector DB. After a time t, B will have moved to B_1 and DB will have turned through an angle $\theta = \omega t$. As t approaches zero the curve BB_1 approaches the arc of a circle and DB_1 approaches DB. Then for a small value of t we may assume that BB_1 is the arc of a circle and $DB_1 = DB$. Now v has no component parallel to DB, while v_1 has a component x parallel to DB. The rate at which this component is increasing when $t = 0$, that is, at B, is the normal acceleration of B at that instant.

Assume α constant. Then after time t

$$v_1 = (\omega + \alpha t)R$$

and

$$\theta = \omega t + \frac{\alpha t^2}{2}$$

$$x = v_1 \sin\theta = R(\omega + \alpha t)\sin\left(\omega t + \frac{\alpha t^2}{2}\right)$$

Differentiating with respect to t and assigning the value zero for t in the result gives $\frac{dx}{dt} = \omega^2 R$, and since $\frac{dx}{dt} = a_B{}^N$ it follows that

$$a_B{}^N = \omega^2 R = \frac{v^2}{R} \tag{2}$$

The same result is obtained if α is variable, although the process of differentiation is longer.

A somewhat shorter demonstration of the same principle follows:

Fig. 5–3 shows the same point B in two positions corresponding to those in Fig. 5–2. Assume the curve BB_1 to be circular. The speed is assumed constant; hence the only acceleration which B has is that which accompanies its change of direction. The velocity vectors for the positions B and B_1 are drawn from a pole Q in Fig. 5–4, and bb_1 repre-

sents the change in velocity for the two positions. That is, $bb_1 = \Delta v$. The triangles Qbb_1 and DBB_1 are similar; therefore

$$\frac{bb_1}{Qb} = \frac{BB_1}{DB}$$

where $DB = R$. But $bb_1 = \Delta v$, and $Qb = \omega R$. Hence

$$\frac{\Delta v}{\omega R} = \frac{BB_1}{R} \tag{3}$$

Now the arc $BB_1 = \omega R \cdot \Delta t$, and as Δt approaches zero the chord BB_1 approaches the arc. Then as Δt approaches zero equation (3) approaches

$$\frac{dv}{\omega R} = \frac{\omega R \cdot dt}{R} \quad \text{or} \quad \frac{dv}{dt} = \omega^2 R$$

Hence $$a_B{}^N = \omega^2 R = \frac{v^2}{R}$$

The resultant acceleration of B is the vector sum of its tangential and normal accelerations.

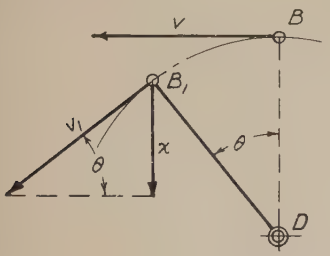

FIG. 5–2

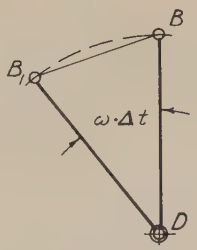

FIG. 5–3

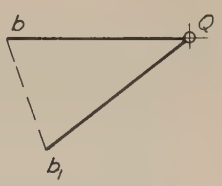

FIG. 5–4

5–7. Relative Acceleration of Two Particles. The acceleration of a particle A relative to another particle B is represented by a vector which, if subtracted from the acceleration vector for A, will give a result represented by the acceleration vector for B. Thus

$$a_A{}^B = a_A \overrightarrow{-} a_B \tag{4}$$

or

$$a_A = a_B \overrightarrow{+} a_A{}^B \tag{5}$$

Equation (5) is expressed in words as follows: *The acceleration of a given particle (or point) is equal to the acceleration of a second particle (or point) plus (vectorially) the acceleration of the first relative to the second.*

Attention is called to the similarity of the above statements to the corresponding ones regarding velocity as given in § 4–2.

5–8. Relative Acceleration of Points on the Same Rigid Body. Although the relations between the accelerations of two points, as stated in the preceding article, correspond exactly to those for velocities, a very important difference exists between the law governing the relative acceleration of two points on the same rigid body and the corresponding law governing the relative velocity. A basic principle governing the relative *velocity* of two points was stated in § 4–4. This *does not* hold true for *acceleration*. Instead, the following principle applies: Given two points B and C on the same rigid body. *Then the total component of the acceleration of C along the line of connection BC is equal to the total component of the acceleration of B along that same line plus (vectorially) the normal acceleration of C relative to B.*

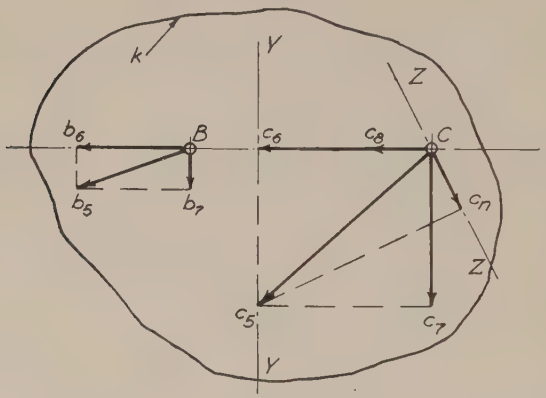

FIG. 5–5

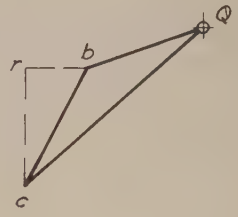

FIG. 5–6

In Fig. 5–5 let Bb_5 be the acceleration vector for point B on the rigid body k. C is another point on the same body. The body k is turning at an angular speed ω_k about some axis either fixed or instantaneous. Assume for convenience that the axis is instantaneous and coincides with B. Then for the instant C must be moving in a circle about B and from equation (2) the acceleration of C normal to its *path with respect to* B is $\omega_k^2 \cdot BC$. This may be written

$$a_C^{NB} = \omega_k^2 \cdot BC = \frac{(v_C^B)^2}{BC} \qquad (6)$$

The principle expressed in equation (6) is stated thus: The acceleration of C relative to B along their line of connection is equal to the square of the angular speed of the body containing the points B and C multiplied by the distance between the points. For brevity, the term a_C^{NB}

is often read " the normal acceleration of C with respect to B." The relation given in equation (6) holds true regardless of the position of the axis about which k is turning, since the length BC is constant and ω_k depends only on the distance BC and the velocity of C relative to B.

In Fig. 5–5, Cc_8 is the vector which represents the normal acceleration of C relative to B, that is $Cc_8 = \omega_k^2 \cdot BC$. The total component of Bb_5 along BC is Bb_6, which, from inspection, is seen to be in the same sense as Cc_8. Hence the total component along BC of the acceleration of C is $Cc_8 + Bb_6 = Cc_6$. Therefore the terminus of the acceleration vector for C must lie somewhere on the line YY drawn through c_6 perpendicular to BC. In order to find the actual vector for a_C some additional data would be needed. Assume that the total component Cc_n, in the direction ZZ, is known. Then the resultant acceleration vector Cc_5 is drawn from C to the point of intersection of YY with a line drawn perpendicular to ZZ at c_n.

In the vector polygon Fig. 5–6 the vectors for B and C are drawn from a common pole Q. The acceleration of C relative to B is shown by the line bc. This has a component parallel to BC represented by br which is equal to Cc_8, and a component perpendicular to BC represented by rc which is equal to $Cc_7 \rightleftarrows Bb_7$. That is

$$br = a_C{}^{NB} \quad \text{and} \quad rc = a_C{}^{TB}$$

5–9. Angular Acceleration of a Rigid Body in Terms of Relative Linear Acceleration of Two Points. It was shown in equation (1), § 5–5, that the tangential acceleration of a point is equal to the angular acceleration of the radius of its path, multiplied by the length of the radius. It follows from the same reasoning that *the relative tangential acceleration of two points on the same body is equal to the angular acceleration of the body multiplied by the distance between the points.*

Hence, in Fig. 5–5

$$a_C{}^{TB} = \alpha_k \cdot BC \tag{7}$$

or

$$\alpha_k = \frac{a_C{}^{TB}}{BC} = \frac{Cc_7 \rightleftarrows Bb_7}{BC}$$

5–10. Acceleration Vectors for Three or More Points on the Same Body. If the acceleration vectors for two points on a body are known, the vector for a third point may be found by the following method. This method illustrates the basic principle. A shorter construction, the proof for which depends upon this one, will be explained in the next article.

In Fig. 5–7 let Bb_5 and Cc_5 be the known acceleration vectors for B and C respectively, and let it be required to find the vector for another point P on the same rigid body.

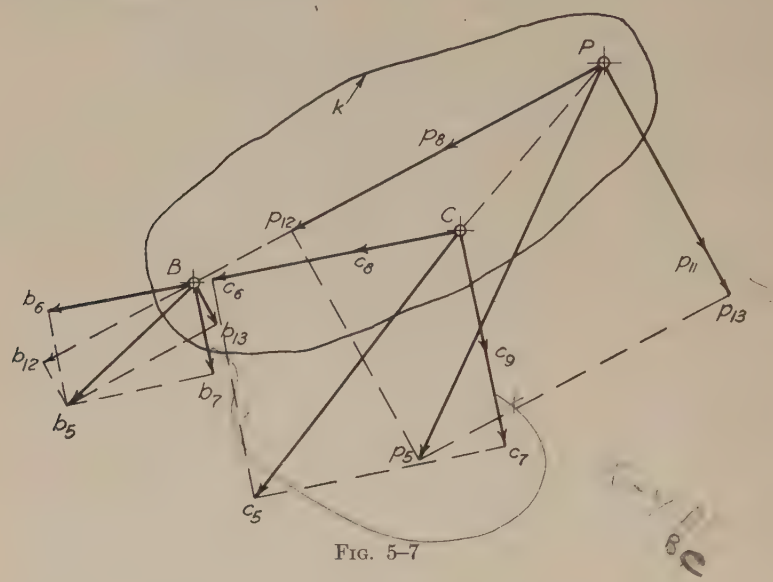

FIG. 5–7

First find $Pp_{11} = a_P{}^{TB}$. From equation (7) it follows that

$$\frac{a_P{}^{TB}}{a_C{}^{TB}} = \frac{BP}{BC}$$

Now $$a_C{}^{TB} = Cc_9 = Cc_7 \rightleftarrows Bb_7$$

Hence $$Pp_{11} = Cc_9 \cdot \frac{BP}{BC}$$

Lay off Pp_{11} perpendicular to BP in the proper sense to correspond with Cc_9. That is, if P and C are on the same side of B, Pp_{11} and Cc_9 must be in the same general sense. Make $p_{11}p_{13}$ equal and in the same sense as Bb_{13}, the total component of Bb_5 perpendicular to BP. Then Pp_{13} is the total component of a_P perpendicular to BP.

Similarly Pp_8, the vector for $a_P{}^{NP}$, is found from the relation

$$\frac{Pp_8}{Cc_8} = \frac{BP}{BC}$$

Then Pp_{12}, the total component of a_P along BP, is equal to $Pp_8 \rightleftarrows Bb_{12}$.

The resultant vector Pp_5 is drawn from P to the intersection of lines drawn at p_{13} and p_{12} perpendicular to Pp_{13} and Pp_{12} respectively.

5–11. Acceleration Vector Image. *The termini of the acceleration vectors for three or more points on the same rigid body form the vertices of a polygon which is similar to the polygon formed by lines connecting the points themselves on the space diagram.* This is true whether the vectors are drawn on the space diagram or on a vector polygon from a common pole Q.

The above law is often stated thus: *The termini of the acceleration vectors form the image of the points to which the vectors apply.*

Proof. In Fig. 5–8, B, C, and P are the same points as in Fig. 5–7, and the acceleration vectors Bb_5, Cc_5, and Pp_5 are taken directly from that figure.

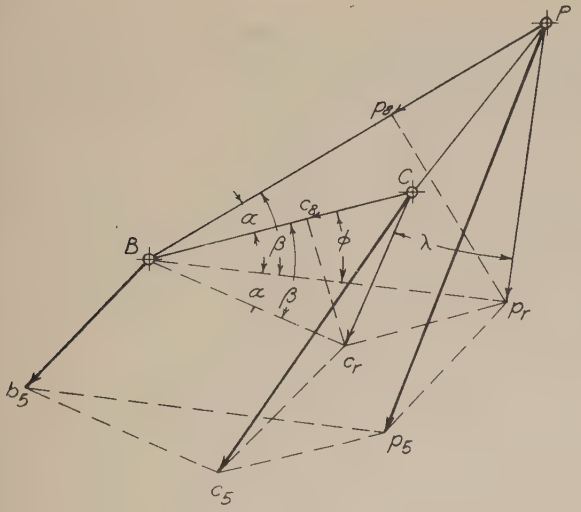

Fig. 5–8

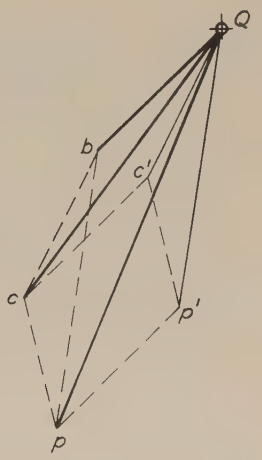

Fig. 5–9

1. To prove that triangle $b_5c_5p_5$ is similar to triangle BCP. Subtract from each vector a vector equal, parallel, and in the same sense as Bb_5. The result is a zero vector for B, a vector Cc_r for C, and Pp_r for P. Then Cc_r and Pp_r represent the accelerations of C and P, respectively, *relative to* B. (See § 5–7.)

The triangle Bc_rp_r is obviously equal to $b_5c_5p_5$, since the lines b_5B, c_5c_r, and p_5p_r are all equal and parallel. Hence we must prove that triangle Bc_rp_r is similar to triangle BCP. Drop perpendiculars from c_r and p_r onto BC and BP respectively. Since Cc_r and Pp_r represent the acceleration of C and P relative to B, Cc_8 represents $a_C{}^{NB}$, c_8c_r represents the

magnitude of $a_C{}^{TB}$, Pp_8 represents $a_P{}^{NB}$, and p_8p_r the magnitude of $a_P{}^{TB}$. Hence, by reference to equations (6) and (7)

$$\frac{Pp_8}{Cc_8} = \frac{BP}{BC}$$

and

$$\frac{p_8p_r}{c_8c_r} = \frac{BP}{BC}$$

Therefore $\frac{Pp_8}{Cc_8} = \frac{p_8p_r}{c_8c_r}$, and the right triangles Cc_8c_r and Pp_8p_r are similar. Also, from the laws of proportion, triangles Bc_8c_r and Bp_8p_r are similar. Consequently the triangles Bc_rC and Bp_rP are similar and $\frac{Bp_r}{Bc_r} = \frac{BP}{BC}$.

Also the angles marked α are equal since each is equal to $\beta - \phi$. Therefore the triangles Bc_rp_r and BCP are similar. Since, as already shown, Bc_rp_r and $b_5c_5p_5$ are alike, it follows that triangles $b_5c_5p_5$ and BCP are similar.

2. In the vector polygon Fig. 5–9, to prove that bcp is similar to BCP of Fig. 5–8. Subtract Qb from each vector as in the previous proof, giving QC^1 as the vector for the acceleration of C relative to B and Qp^1 the corresponding vector for P. Triangle Qc^1p^1 is evidently the same as bcp.

From the previous proof

$$\frac{Qc^1}{Qp^1} = \frac{BC}{BP}$$

Since Qc^1 is parallel to Cc_r and Qp^1 to Pp_r the angle c^1Qp^1 is equal to λ, which in turn is equal to α. Hence triangle Qc^1p^1 is similar to triangle BCP and therefore bcp is similar to BCP.

5–12. The Instantaneous Axis of Accelerations is that point on a rigid body which, at the instant, has zero acceleration. The acceleration vectors for all points on the body make equal angles with lines drawn from the points to the instantaneous axis of accelerations, and the length of the vectors are in the direct ratio of the lengths of these lines.

In Fig. 5–10 let B and C be two points on the body k whose acceleration vectors are known to be Bb_5 and Cc_5. To find the instantaneous axis of accelerations. Draw the vector polygon Fig. 5–11. Assume the triangle Qbc to be moved around until b coincides with B and bc lies along BC as shown at Bc_xq_x. Construct triangle $BC\Psi$ similar to Bc_xq_x. Then Ψ is the instantaneous axis of accelerations of k.

Proof. It has been shown that the ends of the vectors on the polygon constitute the image of the space diagram of the points. Pole Q is itself the vector for that point on the body k which has zero acceleration. Since the triangle ΨBC is similar to the triangle Qbc, the point Q is the

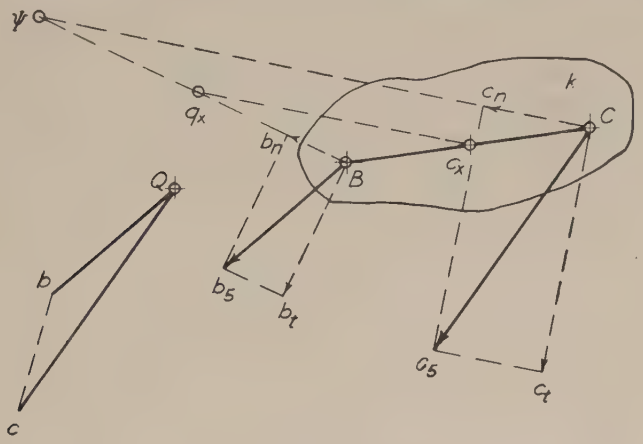

Fig. 5–11 Fig. 5–10

point on the image which represents Ψ on the space diagram. Hence, point Ψ on body k has zero acceleration. The total components of Bb_5 along and perpendicular to ΨB are $a_B{}^{N\Psi} = \omega_k{}^2 \cdot \Psi B$ and $a_B{}^{T\Psi} = \alpha_k \cdot \Psi B$. Similarly the total components of Cc_5 along and perpendicular to ΨC are $a_C{}^{N\Psi} = \omega_k{}^2 \cdot \Psi C$ and $a_C{}^{T\Psi} = \alpha_k \cdot \Psi C$. Hence

$$\frac{Bb_h}{Cc_n} = \frac{\Psi B}{\Psi C} = \frac{Bb_t}{Cc_t}$$

It follows therefore that angles ΨBb_5 and ΨCc_5 are equal and that

$$\frac{Bb_5}{Cc_5} = \frac{\Psi B}{\Psi C}$$

5–13. Accelerations in a Four-Bar Linkage. In the four-bar linkage $ABCD$, Fig. 5–12, A and D are the fixed axes. The links are f, k, h, and g, as shown. Let ω_f be the known angular speed of f and α_f the known angular acceleration of f. To draw the acceleration vectors for B and C.

The vector for B must be found first by computing its tangential and normal components, $a_B{}^{TA}$ and $a_B{}^{NA}$.

From equation (1), § 5–5,

$$a_B{}^{TA} = \alpha_f \cdot AB$$

Choose a suitable scale and lay this off perpendicular to AB at B. Bb_t is this vector.

From equation (2), § 5–6,

$$a_B{}^{NA} = \omega_f{}^2 \cdot AB$$

Lay this off *at the same scale* from B along the radius BA toward A. This vector is Bb_n. Bb_5 is the vector sum of Bb_t and Bb_n and represents the acceleration of B. The acceleration of C is found in accordance with the principles discussed in § 5–8 in connection with Fig. 5–5. The acceleration of C relative to B along CB is $\omega_k{}^2 \cdot CB$ (see equation (6), § 5–8), in which $\omega_k = \omega_f \cdot \dfrac{BE}{BC}$ (see § 4–9). Lay this off at Cc_8 from C toward B along CB. Add vectorially to Cc_8, c_8c_6 equal to Bb_6,

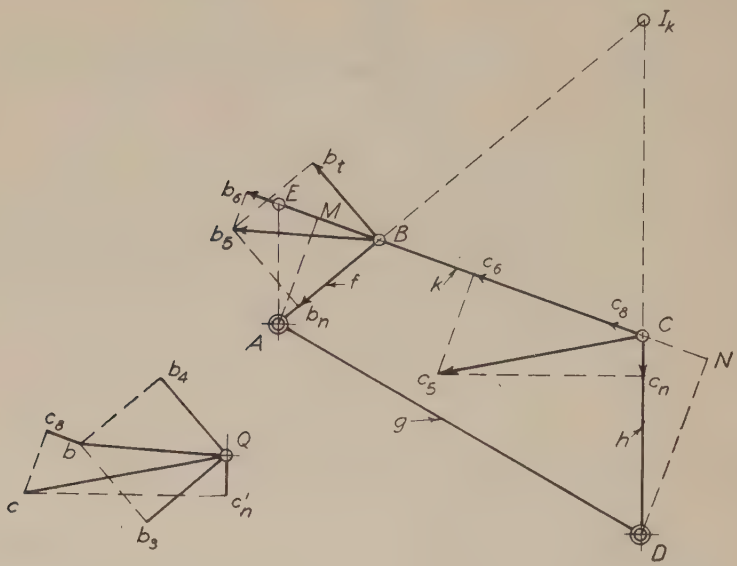

Fig. 5–12

Fig. 5–13

the total component of Bb_5 along CB. This gives Cc_6 as the total component of a_C along CB. Next find $a_C{}^{ND}$, which is equal to $\omega_h{}^2 \cdot DC$, where $\omega_h = \omega_f \cdot \dfrac{AM}{DN}$. (See § 4–9.) Here AM and DN are perpendiculars drawn from A and D to CB. Lay off the vector Cc_n representing $a_C{}^{ND}$. Then the resultant vector Cc_5 for C is drawn from C to the point of intersection of perpendiculars drawn to Cc_6 and Cc_n at c_6 and c_n respectively. In Fig. 5–13 the construction for the same problem is

made on the vector polygon. Qb_4 and Qb_3 are drawn equal and parallel to Bb_t and Bb_n respectively, and their vector sum Qb is found. Then bc_8 and $Qc_n{}^1$ are drawn equal and parallel to Cc_8 and Cc_n respectively. Perpendiculars to bc_8 and $Qc_n{}^1$ intersect at c, giving Qc as the vector for C.

5–14. Graphical Determination of the Normal Acceleration of the Driven Crank Pin Relative to the Driving Crank Pin and to its Fixed Axis. The length of the vectors Cc_8 and Cc_n of Fig. 5–12 usually may be found graphically as shown in Fig. 5–14, provided the scale of vectors is such that the velocity vector for B is equal in length to AB, and $a_B{}^{NA} = BA$.

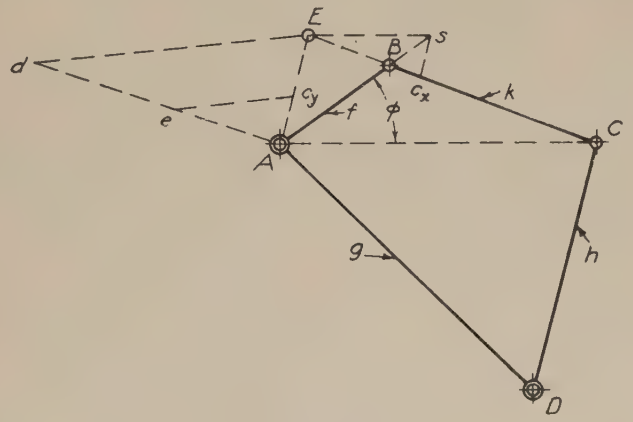

FIG. 5–14

To find Cc_8 ($= a_C{}^{NB}$) *graphically.* Draw AE parallel to DC. Through E draw a line parallel to AC meeting AB at s. Through s draw a line parallel to DC meeting BC at c_x. Then Bc_x is the required length of the vector for $a_C{}^{NB}$.

Proof. In the similar triangles sBc_x and ABE, $\dfrac{Bc_x}{BE} = \dfrac{Bs}{AB}$, and in the similar triangles sBE and ABC, $\dfrac{BE}{BC} = \dfrac{Bs}{AB}$. Therefore $\dfrac{Bc_x}{BE} = \dfrac{BE}{BC}$.

$\therefore Bc_x = \dfrac{(BE)^2}{BC}$.

But from § 4–11, BE represents the velocity of C relative to B (all of which is velocity of turning), and $\dfrac{(BE)^2}{BC} = a_C{}^{NB}$. [See equation (6).] Hence

$$Bc_x = a_C{}^{NB}$$

To find Cc_n ($= a_C^{ND}$) *graphically.* From A draw a line making a fairly large acute angle with AE. On this line lay off $Ad = DC$ and $Ae = AE$. Join d and E, and through e draw a line parallel to dE meeting AE at C_y. Then Ac_y is the required length of the vector for the normal acceleration of C relative to the fixed axis D ($= a_C^{ND}$).

Proof. In the similar triangles AdE and Aec_y, $\dfrac{Ac_y}{AE} = \dfrac{Ae}{Ad}$, or

$$Ac_y = \frac{Ae \times AE}{Ad}$$

But $Ae = AE$, and $Ad = DC$. Therefore $Ac_y = \dfrac{(AE)^2}{DC}$. But AE represents the velocity of C perpendicular to DC. (See § 4–11.) Hence

$$Ac_y = a_C^{ND}$$

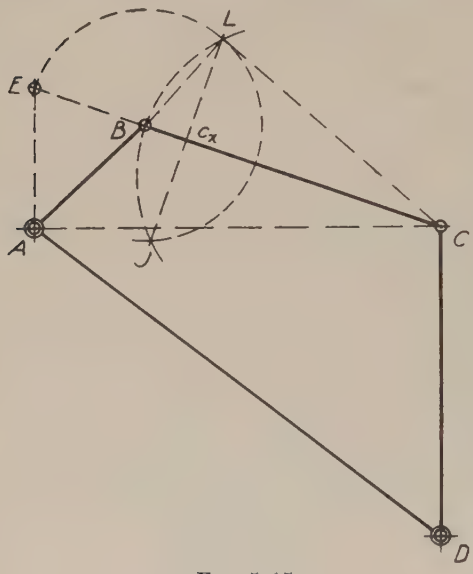

Fig. 5–15

The above graphical construction for finding Cc_s ($= a_C^{NB}$) is convenient and accurate except when the angle ABC approaches 0° or 180°, when the intersection at s becomes so flat that the point cannot be determined accurately. When the angle ABC is 0° or 180° the construction fails completely.

Another method, commonly known as Klein's, may be used instead of the one already given, provided that BC is greater than AB.

In Fig. 5–15 with center B and radius BE describe an arc as shown; with center at the mid point of BC and radius equal $\dfrac{BC}{2}$ describe another arc intersecting the first one at two points, J and L. Then the common chord of these two arcs will intersect BC at the required point c_x.

Proof. In the similar triangles Bc_xL and BLC,

$$\frac{Bc_x}{BL} = \frac{BL}{BC}$$

but $BL = BE$ = velocity of C relative to B. Therefore

$$Bc_x = \frac{(BE)^2}{BC} = a_C{}^{NB}$$

5–15. Accelerations of Points on a Rolling Body. The acceleration of any point on a body which rolls without slip on another body is determined by the proper application of the principles already discussed. In general the most convenient method is as follows:

1. Find the acceleration of the center of curvature of that part of the body which is in contact with the second body.
2. Find the acceleration of the given point relative to the center of curvature.
3. Find the vector sum of these two quantities, thus obtaining the required acceleration of the point in question.

In the case of a circular cylinder, simple equations may be derived for obtaining the acceleration of any given point. One example will be worked out here in order to suggest the method of procedure, namely, that of a circular cylinder rolling externally on a fixed cylinder.

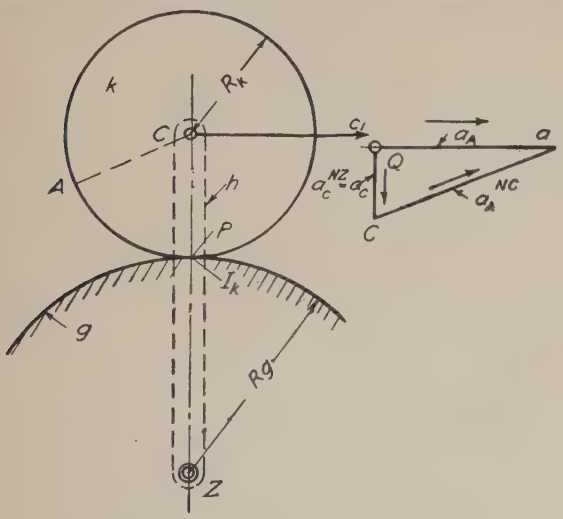

Fig. 5–16

Fig. 5–17

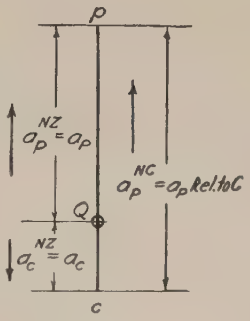

Fig. 5–18

In Fig. 5–16 the axis C of the cylinder k is carried by the arm h. The arm h turns about the fixed axis Z at a constant angular speed ω_h. The cylinder k rolls without slip on the fixed cylinder g whose axis is also at Z. The radii of k and g are R_k and R_g respectively. Then the distance ZC is evidently equal to $R_g + R_k$. Let the angular speed of k be represented by ω_k.

Required to find expressions for the acceleration of C and of any point A on the circumference of k; also that point P on k which is at the instantaneous axis I_k.

To find a_C. Since g is fixed, I_k is at the line of tangency of k and g. $Cc_1 = v_C = \omega_k(R_g + R_k)$, and since ω_k is constant v_C is constant and $a_C{}^{TZ} = 0$. Therefore the only acceleration which C has is that due to the fact that it is moving in a circle about Z. That is

$$a_C = a_C{}^{NZ} = \omega_k{}^2(R_g + R_k) = \frac{v_C{}^2}{R_g + R_k} \tag{8}$$

To find a_A. $\omega_k = \dfrac{v_C}{R_k}$. Therefore

$$a_A{}^{NC} = \omega_k{}^2 \cdot R_k = \frac{v_C{}^2}{R_k} \tag{9}$$

and since v_C is constant α_k is zero. Therefore the only acceleration which A has relative to C is $a_A{}^{NC}$ as expressed in equation (9). Hence

$$a_A = a_A{}^{NC} \overrightarrow{+} a_C = \frac{v_C{}^2}{R_k} \overrightarrow{+} \frac{v_C{}^2}{R_g + R_k} \tag{10}$$

To find a_P. Apply equation (10), substituting P for A and remembering that $a_P{}^{NC}$ and $a_C{}^{NZ}$ act along the same line in opposite senses. Then equation (10) becomes

$$a_P = a_P{}^{NC} - a_C{}^{NZ} = \frac{v_C{}^2}{R_k} - \frac{v_C{}^2}{R_g + R_k} = v_C{}^2 \cdot \frac{R_g}{R_g R_k + R_k{}^2} \tag{11}$$

or

$$a_P = \omega_k{}^2 \frac{R_g R_k}{R_g + R_k} \tag{12}$$

Figs. 5–17 and 5–18 show the vector polygons for equations (10) and (11) respectively. Equations (11) and (12) are equivalent. If the radius R_g is infinite, that is, if g is a plane surface, $a_P = \omega_k{}^2 \cdot R_k = \dfrac{v_C{}^2}{R_k}$ and acts along PC toward C. The acceleration of A then has the same magnitude as a_P and acts along AC toward C.

5–16. Acceleration in a Sliding Pair. In determining the accelerations of points on two bodies which are sliding on each other, only one important variation of the methods already explained is necessary. This occurs when one or both of the bodies is turning at the same time that they are sliding on each other. Then a special computation combined with certain graphical constructions is necessary.

In Fig. 5–19 the body h turns about the fixed axis C. A crank f turns about another fixed axis B. At A on f is pivoted a block which slides in a circular slot in h. The center line of this slot is the arc HH with its center of curvature at D. P is a point on h lying in the axis of the pin at A. That is, P and A coincide in the drawing. Let ω_f be such that the velocity of A is represented by the vector Aa_1. Then by

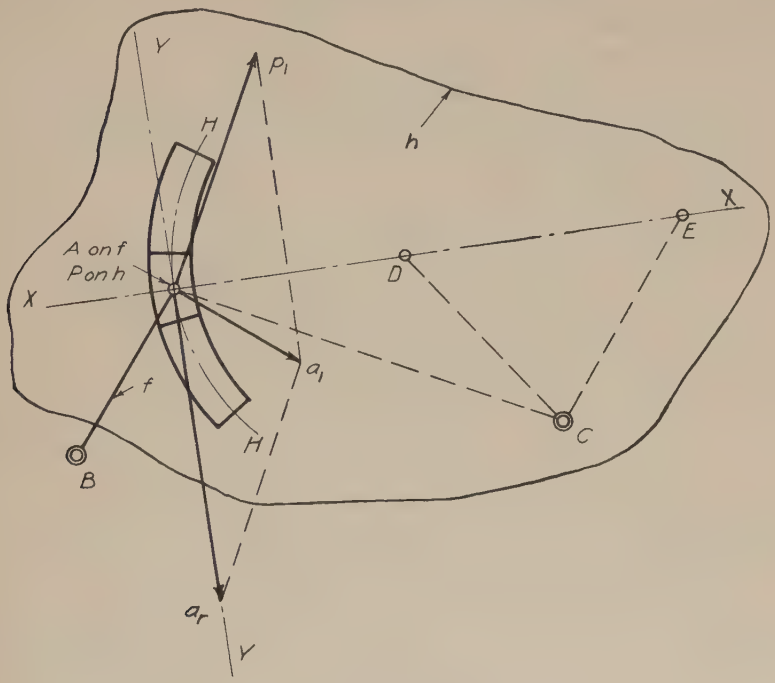

Fig. 5–19

resolution of Aa_1 as explained in Chapter IV, the vector Pp_1 is found for the velocity of P which is of course perpendicular to CP. The other side of the parallelogram is Aa_r and represents the velocity of A *relative to* P, that is, the velocity with which A is moving along HH. Let S denote this velocity of A relative to P.

Aa_r lies along the line YY which is tangent to HH at P. ω_h is equal to $\dfrac{Pp_1}{CP}$. Our problem is to find the acceleration of A relative to P along XX which is the normal to HH at P and evidently passes through the center of curvature D. Denote this relative acceleration by $a_A{}^{NP}$. Let ρ equal the radius of curvature PD. Since the radius is constant, an actual link might be inserted connecting A to D. Designate this

link by g, and let ω_g denote the absolute angular speed of this link g and $\omega_g{}^h$ the angular speed of g relative to h. Now $a_A{}^{NP}$ is the difference of two quantities, namely, $a_A{}^{ND}$ and $a_P{}^{ND}$. That is

$$a_A{}^{NP} = a_A{}^{ND} - a_P{}^{ND} \tag{13}$$

But $$a_A{}^{ND} = \omega_g{}^2 \cdot \rho \quad \text{and} \quad a_P{}^{ND} = \omega_h{}^2 \cdot \rho$$

Therefore $$a_A{}^{NP} = \omega_g{}^2\rho - \omega_h{}^2\rho \tag{14}$$

The value of ω_g is obtained from the equation $\omega_g = \omega_h \mp \omega_g{}^h$, the plus sign applying if the velocity of sliding is such that g turns relative to h in the same sense that h is turning, and the minus sign applying if the senses are opposite. Also,

$$\omega_g{}^h = \frac{S}{\rho}$$

Therefore $$\omega_g = \omega_h \mp \frac{S}{\rho}$$

Substituting this value in equation (14) gives

$$a_A{}^{NP} = \rho\left(\omega_h \mp \frac{S}{\rho}\right)^2 - \omega_h{}^2\rho \tag{15}$$

which reduces to

$$a_A{}^{NP} = \frac{S^2}{\rho} \mp 2\,\omega_h \cdot S \tag{16}$$

If the radius ρ of the arc HH is such that D comes in a convenient place on the paper the problem can be solved by substituting the equivalent four-bar linkage $BADC$ and treating as explained in § 5–13. If ρ is large so that point D is not accessible the law expressed in equation (16) must be used. Most commonly the slot is rectilinear and ρ is infinite. Then the term $\frac{S^2}{\rho}$ becomes zero and equation (16) reduces to

$$a_A{}^{NP} = \mp 2\,\omega_h \cdot S \tag{17}$$

In the case of either the curved or the straight slot an equivalent to equation (16) or (17) may be found as follows:

Find that point E on h which has the same velocity as A on f. (See § 4–11.) Then the velocities of E and A relative to P are alike. Therefore

$$v_E{}^P = v_A{}^P = S$$

Then $$\omega_k = \frac{S}{AE} \quad \text{or} \quad S = AE \cdot \omega_k$$

Substituting this value of S in equation (16) gives

$$a_A{}^{NP} = \frac{(AE \cdot \omega_k)^2}{\rho} \mp 2\, AE \cdot \omega_k{}^2 \tag{18}$$

and a similar substitution in equation (17) gives for rectilinear sliding

$$a_A{}^{NP} = \mp 2\, AE \cdot \omega_k{}^2 \tag{19}$$

It can be shown that the sense of the quantity $2\, AE \cdot \omega_k{}^2$ is always from E toward A. The proof of this statement is rather long but relatively simple.

The principle involved in the " compound supplementary acceleration " expressed in equations (16) to (19) as $2\, S \cdot \omega_k$ or $2\, AE\omega_k{}^2$ is known as *Coriolis' law.* A thorough study of this law is not necessary in this place since the discussion already given should be enough to make possible its application to the solution of most problems that are likely to arise.

PROBLEMS

V–1. A crank AB $1\frac{1}{2}$ in. long is turning about the fixed axis A. The angular speed of AB at a given instant is 2 radians per second, and the angular acceleration is $1\frac{1}{2}$ radians per second per second. Compute the tangential and normal components of the acceleration of B. Draw the crank making an angle of 45° with a horizontal line and draw vectors for these components at a scale $\frac{1}{2}$ in. equals 1 in. per sec per sec. Find the resultant acceleration.

V–2. The motion of the rigid body k is such that the point A moves in a circular path of 1-in. radius about a fixed axis C located at the left of A. The vector Aa_1 is $1\frac{1}{2}$ in. long and represents the instantaneous velocity of A in inches per second. The velocity of A is *decreasing* at the rate of 1 in. per sec per sec. B is known to have a resultant acceleration along the line XX. Determine and draw the vectors for the acceleration of A and of B. Also find the tangential acceleration of B relative to A ($= a_B{}^{TA}$). and the normal acceleration of B relative to A ($= a_B{}^{TA}$).

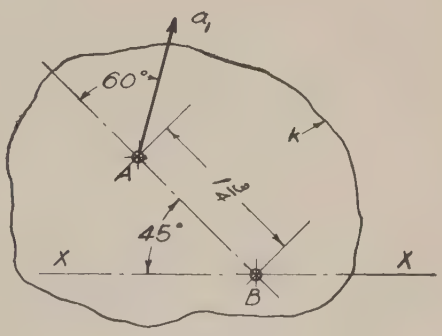

PROB. V–2

Draw all vectors on the space diagram and on a vector polygon with a pole Q. Measure the necessary vector or vectors and compute the angular acceleration of k ($= \alpha_k$).

V–3. A circular disk is turning about its axis C at constant speed of $\frac{3}{4}$ radian per second. Three points A, B, and D on the disk lie on radial lines 120° apart. The distances from C to A, B, and D are $1\frac{1}{2}$ in., 2 in., and 3 in., respectively. Draw the acceleration vector for each of the three points on the space diagram and on a vector polygon. Compare the triangle formed by the termini of the vectors with the triangle formed by the points A, B, and D.

V–4. $AB = 1$ in.; $AD = 2\frac{3}{4}$ in.; $DC = 1\frac{1}{4}$ in.; $BC = 1\frac{1}{2}$ in. A and D are fixed axes. $\omega_f = 1\frac{1}{2}$ radians per second. $\alpha_f = \frac{3}{4}$ radian per second per second right handed. Compute $a_B{}^{NA}$ and $a_B{}^{TA}$; draw their vectors at scale 1 in. = 1 in. per sec per sec. Find the resultant vector and state the magnitude of a_B in inches per second per second. Then find the vector for a_C by the method explained in connection with Fig. 5–12, and state its magnitude.

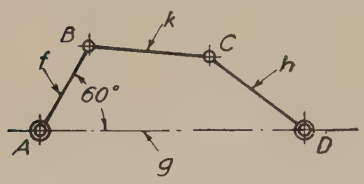

PROB. V–4

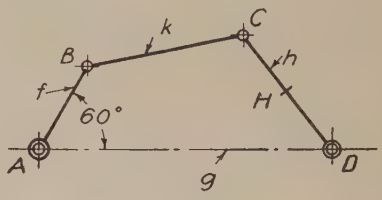

PROB. V–5

V–5. $AB = 2$ in.; $AD = 6$ in.; $DC = 3$ in.; $BC = 3\frac{1}{4}$ in. A and D are fixed axes. $\omega_f = 1$ radian per second. $\alpha_f =$ zero. Find the vector for a_C by the method shown in Fig. 5–14. Also find the vector for a point H on DC midway between D and C.

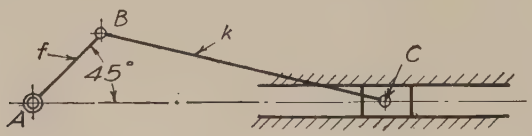

PROB. V–6

V–6. $AB = 1$ in.; $BC = 3$ in. $\omega_f = 1$ radian per second, constant. The block at C moves in fixed guides. Find the vector for a_C by the method shown in Fig. 5–14.

V–7. The cylinder k rolls without slip on the straight track g. $R_k = 2$ in. Velocity of $C = 1\frac{1}{4}$ in. per sec; acceleration of $C = \frac{3}{4}$ in. per sec per sec (same sense as velocity). Find the vector for the acceleration of P.

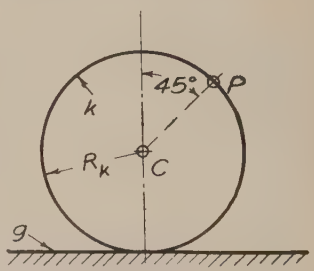

PROB. V–7

V–8. The cylinder k has a diameter of $\frac{6}{\pi}$ in. It rolls along the straight track g without slip, starting from rest. The axis C moves a distance of 6 in. to the right in 1 min with harmonic motion, coming to rest at the end of the 6-in. motion. When C has moved 1 in. from its starting point, find the position of that point P which was in contact with the track at the instant of starting, and find the acceleration vector for P in this new position.

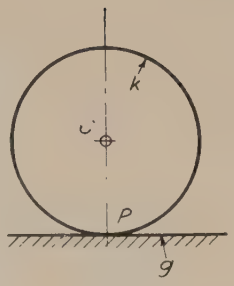

PROB. V–8

V–9. $R_k = 1$ in.; $R_g = 2$ in. P is a point on k $\frac{4}{10}$ in. from C. The axis C is carried by the arm h which turns at constant angular speed $\omega_h = 1$ radian per second about the fixed axis Z. Cylinder k rolls without slip on the fixed cylinder g. Find a_P for the position shown. Also find the component of a_P parallel to YY when h has turned through an angle of 30° to the right.

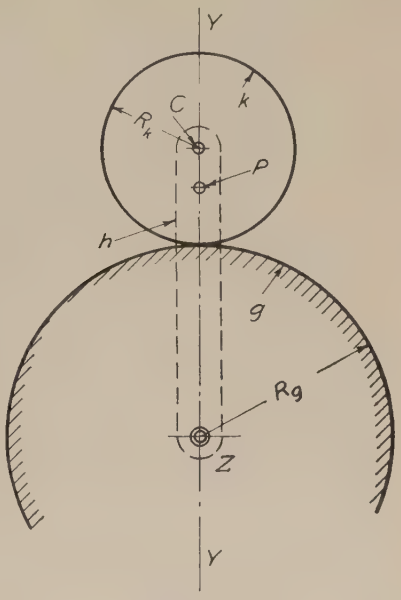

PROB. V–9

V–10. $R_k = 2$ in.; $R_h = 2$ in.; $AB = 2$ in. B is a fixed axis. k rolls without slip on the fixed track g. $v_C = 2$ in. per sec to the right, and C has zero acceleration at the instant. Find the angular acceleration (α_m) of m.

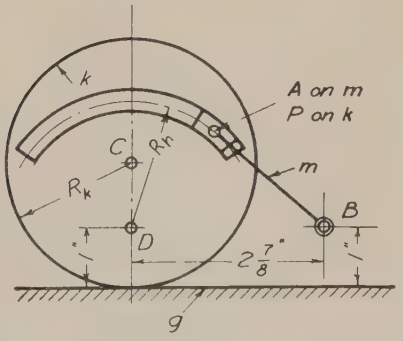

PROB. V–10

CHAPTER VI

LINKAGES

6–1. A Link may be defined as a rigid piece or a non-elastic substance which serves to transmit force from one piece to another or to cause or control motion.

For example, that part of a belt or chain running from the driven to the driving wheel, the connecting rod of an engine, the fluid (if assumed to be incompressible) in the cylinder of a hydraulic press, would be links according to the above definition. In ordinary practise, however, the name is applied to a rigid connector which may be fixed or in motion.

6–2. A Linkage consists of a number of pairs of elements connected by links. If the combination is such that relative motion of the links is possible, and the motion of each piece relative to the others is definite, the linkage becomes a **kinematic chain.**

In order that a linkage may constitute a kinematic chain, the number of fixed points or points whose motions are determined by means outside the particular linkage in question, must bear such a relation to the total number of links that the linkage may form a *four-bar linkage* or a *combination of two or more four-bar linkages.* This may be seen by reference to Figs. 6–1, 6–2, and 6–3. The linkage in Fig. 6–1 consists of three links AB, AC, and BC, forming a triangle, and it is apparent that no relative motion of the links can occur since only one triangle can be formed from three given lines. On the other hand, if four links are involved, as in Fig. 6–2, relative motion of a definite nature will result. If now five links, as AB, BC, CD, DE, and EA, Fig. 6–3, constitute the linkage, any link, as AE, may be fixed; then AB and ED become cranks, but a given angular motion of the crank AB does not impart a definite resulting angular motion to DE

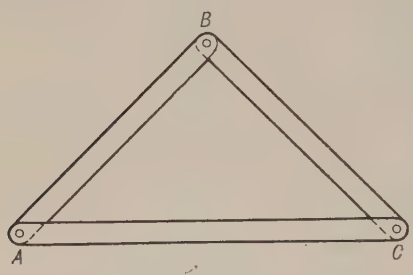

FIG. 6–1

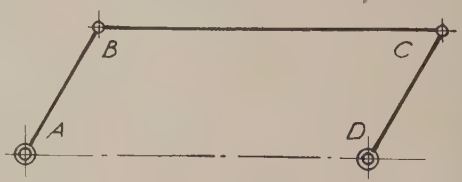

FIG. 6–2

unless the point C is guided by some external means. If, however, C is guided by the crank FC turning about any fixed center F the motions of all the links become determinate. But the linkage, by the addition of the crank FC, has now been transformed into a combination of two four-bar linkages, namely: $ABCF$ and $FCDE$ with A, F, and E fixed.

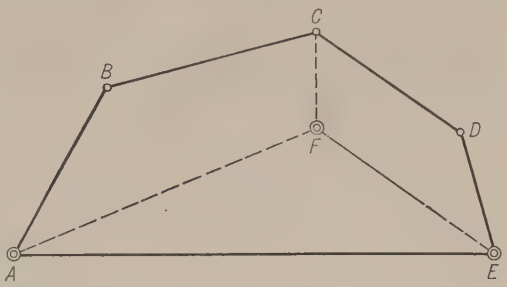

Fig. 6–3

In general, it may be said that any mechanism may be analyzed as a four-bar linkage or as a combination of two or more such linkages.

6–3. The Four-Bar Linkage was described in Chapter I, and methods for determining the velocity and acceleration of points on the several links were explained in Chapters IV and V. In the present chapter additional fundamental principles will be discussed, examples of linkages will be shown, and their motions analyzed by the application of the methods given in the earlier chapters.

In studying the motion of a mechanism by applying the laws of the four-bar linkage the first step always is to identify the four-bar linkage or chain of four-bar linkages. It must be borne in mind that each line representing a link is a part of some rigid body. The line of centers is on a body assumed to be fixed; the center lines of the cranks are on rigid bodies turning about axes attached to the fixed body, and the center line of the coupler (or line of connection as it is sometimes called) is on a rigid body connected to each crank by either a turning pair or a sliding pair.

To identify the links it is best, usually, to start at the driving member and find the fixed axis about which this member is turning. This member, being a rigid piece turning about a fixed axis, is a crank. Next, if possible, determine the fixed axis and the rigid piece turning about it which receives its motion from the driver either by direct contact or through *one* intermediate connector. Thus we find two cranks of a four-bar linkage. The member to which the fixed axes are attached is the fixed link, and the straight line joining the two fixed axes is the *line of centers*. If the driving crank imparts motion to the driven crank through an intermediate connector, the connector is the *coupler* or *connecting rod*, its center line being the line joining the axes of the pin joints by which the coupler is connected to the cranks. The center line of each crank is the line joining the fixed axis to the point of

connection with the coupler. If the two cranks are in direct contact the line of the coupler is the common normal to the two contact surfaces; the intermediate connecting body containing this line is of zero dimensions and therefore is imaginary. The first four-bar linkage having been identified, others in a chain of linkages may be followed through in a similar manner.

In some instances the axis of a crank may be its instantaneous axis of velocities.

It is not necessary that any link be absolutely at rest. The link AD, Fig. 6–2, which is there assumed to be fixed, may be attached to some other part of the machine which itself is in motion. $ABCD$ remains a four-bar linkage and the relative motions of its four links are unchanged, although, of course, the absolute motion of each link depends not only upon its motion with relation to the link which is assumed to be fixed (in this case AD) but also upon the motion which that link has.

In this book, motion with respect to the link assumed to be fixed will be considered as absolute motion. It will be apparent that the absolute motion of any point in a four-bar linkage depends upon the length of the different links relative to the length of the fixed link. By the length of a link is meant the center-line distance between the axes of the joints connecting it to the two adjacent links of the four-bar linkage.

6–4. Relative Motion of the Links in a Four-Bar Linkage. Since, as shown in § 6–3, the motions of the links, relative to some one link assumed to be fixed, are not changed if motion is imparted to that link, it follows that the motion of any link, relative to any other link of the linkage, is the same whichever link is fixed. In other words, the relative motions of the links of a four-bar linkage are independent of the fixedness of the links. This principle is taken advantage of in the application of four-bar linkages, particularly where centrodes are substituted for some of the links, as will be illustrated later.

6–5. Angular Speed Ratio of Links. The laws governing the relation of the angular speeds of the links of a four-bar linkage were explained in Chapter IV. (See § 4–9.) Because of its importance in the analysis of linkages the law applying to the angular speed of the cranks is again stated as follows: *The angular speeds of the two cranks of a four-bar linkage are inversely as the lengths of the perpendiculars or any two parallel lines drawn from the fixed centers to the center line of the connecting rod; also, inversely as the distances from the fixed centers to the point of intersection of the center line of the connecting rod and the line of centers (produced if necessary).*

6–6. Dead Points. A position in the cycle of motion of the driven crank of a linkage in which it is in line with the connecting rod, and

therefore cannot be moved by the connecting rod alone, is known as **a dead point.** If the driven crank makes complete revolutions there are two such positions in its cycle.

6–7. Centrodes. In Fig. 6–4, A and D are fixed axes; the bodies containing AB, BC, DC, and AD are denoted by f, k, h, and g respectively. The cranks f and h oscillate through angles B_0AB_1 and C_0DC_1 respectively. In any position as $ABCD$ the instantaneous axis of k is at I. Draw the linkage in a series of positions from AB_0C_0D to AB_1C_1D, and draw a smooth curve through the successive positions of I. This curve is $B_0I_2IC_1$. It is the locus of the instantaneous axis of k for the

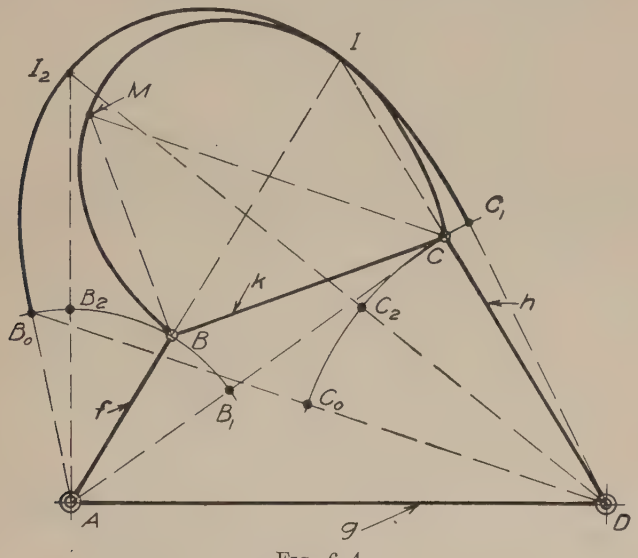

Fig. 6–4

range of motion specified and is called the centrode of k. Again let B and C be assumed fixed and a series of positions of the instantaneous axis of g found. The resulting centrode of g is the curve $BMIC$.

Points on the outline of the centrode of g can be found readily, as shown at M. From B and C draw arcs with radii B_2I_2 and C_2I_2 respectively. These arcs intersect at M, giving the point on the piece k which will be at I_2 when the linkage is in the position AB_2C_2D.

Now assume the body k of which the line BC is a part to be given a contour of the form of the centrode of g ($BMIC$) and a piece of the form of the centrode of k ($B_0I_2IC_1$) to be attached to the fixed piece g. Then, as the cranks turn, k will roll on the fixed curve without slip. If the cranks are removed and k given such a rolling motion the points B and C will have exactly the same motion as they did when the cranks were

in place. The locus of the instantaneous axis of k is referred to as the fixed centrode and that of g as the moving centrode (k being the moving piece).

Since the instantaneous axis is a line perpendicular to the plane of motion of any line in a body having coplanar motion, the centrode is a surface passing through the successive positions of the instantaneous axis. The curves shown in the figure are the "end views," or traces on the plane of the drawing, of the centrodes.

An instantaneous axis exists for every position of a body having any coplanar motion other than pure translation, or rotation about a fixed axis. Hence every body having such motion has a centrode. The form of the centrode depends upon the form of the path of any two points in the body. In the coupler of a four-bar linkage it depends upon the relative lengths of the four links. Frequently the outline of the centrode is a complex curve having little practical value, but in some special cases it is a simple curve such as a circle, an ellipse, or even a straight line. If this occurs it may be convenient to make use of the centrode either in analyzing the motion or in constructing the mechanism.

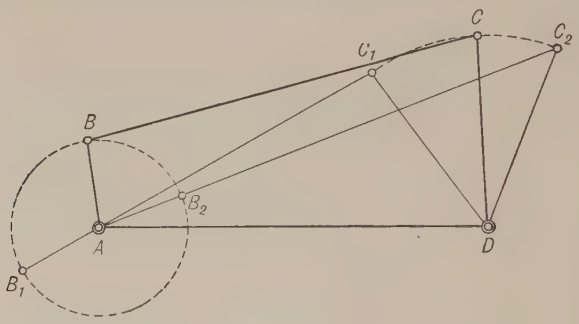

Fig. 6–5

6–8. Crank and Rocker. Let the link AD (Fig. 6–5) be fixed, and suppose the crank AB to revolve while the lever DC oscillates about its axis D. In order that this may occur, the following conditions must exist.

1. $AB + BC + DC > AD$.
2. $AB + AD + DC > BC$.
3. $AB + BC - DC < AD$.
4. $BC - AB + DC > AD$.

1 and 2 must hold in order that any motion shall be possible; 3 can be seen from the triangle AC_2D in the extreme right position AB_2C_2D, which must not become a straight line; and 4 can be seen from the triangle AC_1D, in the left extreme position AB_1C_1D.

At two points C_1 and C_2 in the path of C the motion of the lever is reversed, and it will be noticed that, if the lever DC is the driver, it cannot, unaided, drive the crank AB, as a pull or a thrust on the rod BC would only cause pressure on A, when C is at either C_1 or C_2. If AB is the driver, this is not the case.

6–9. Drag Link. It will be observed that, in Fig. 6–5, one of the two longer links is the fixed link, and the proportions are such that only one of the cranks (AB) makes a complete revolution. In Fig. 6–6 the

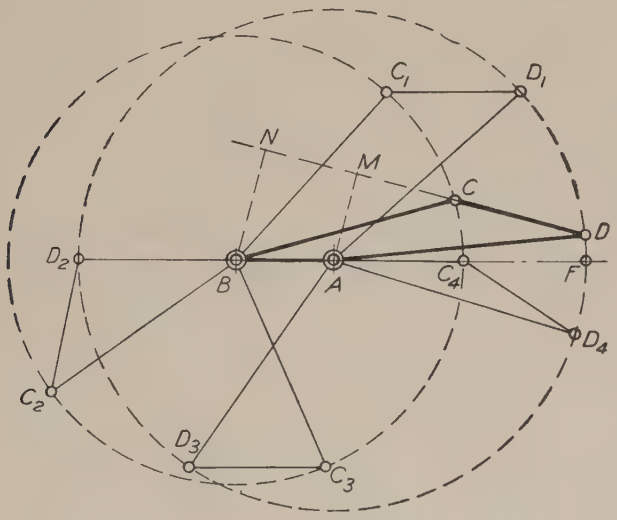

Fig. 6–6

proportions are nearly the same as in Fig. 6–5, but AB is made the fixed link. The links BC and AD revolve about B and A respectively, that is, become cranks, and CD becomes a connecting rod. This mechanism is known as the *drag link*.

In order that the cranks may make complete revolutions, and that there may be no dead points, the following conditions must hold:

1. Each crank must be longer than the line of centers, which needs no explanation.

2. The link CD must be greater than the lesser segment C_4f and less than the greater segment C_4D_2, into which the diameter of the greater of the two crank circles is divided by the smaller circle. This may be expressed as follows:

$$CD > AB + AD - BC \quad \text{(see triangle } AC_4D_4\text{)}$$
$$CD < AD + BC - AB \quad \text{(see triangle } BC_2D_2\text{)}$$

Dropping the perpendiculars AM and BN upon the center line of the connecting rod,

$$\frac{\text{Angular speed of } AD}{\text{Angular speed of } BC} = \frac{BN}{AM}$$

In the positions ABC_1D_1 and ABC_3D_3, when CD is parallel to the line of centers, the angular speeds of AD and BC are equal, since the perpendiculars BN and AM then become equal.

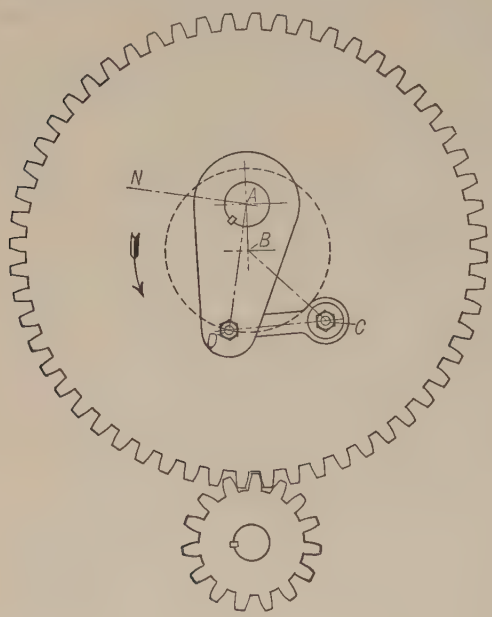

Fig. 6–7

If BC revolves left handed and is considered the driver, it will be noticed that between the positions ABC_3D_3 and ABC_1D_1 the crank AD is gaining on BC, and between ABC_1D_1 and ABC_3D_3 it is falling behind BC.

Fig. 6–7 shows an application of the drag link for driving the ram of a Dill slotter. The links in this figure are lettered to correspond with Fig. 6–6. The large gear, turning on a fixed boss, centered at B on the frame, carries the pin C and forms the driving crank corresponding to BC, Fig. 6–6. The shaft A has its bearing in a hole in the large boss on which the gear turns and has keyed to it the crank arm AD. On the other end of this shaft is another crank arm, or its equivalent, the center line of which is AN. To this latter crank arm is attached the connecting rod which drives the ram. The mechanism is shown in the position which it occupies when the ram is about at the middle of the downward or cutting stroke.

6–10. Parallel Crank Four-Bar Linkage. In Fig. 6–8, the crank AB is equal in length to the crank CD and the line of centers AD is equal to the connecting rod BC. The center lines of the linkage thus form a parallelogram in every position, provided the cranks turn in the same sense. Therefore, the perpendiculars AM and DN are always equal and the two cranks are always turning at the same angular speed. A familiar example of this linkage is furnished by the cranks and parallel

rod of a locomotive. Here the link formed by the center line of bearings in the frame carrying the axles of the two driving wheels corresponds to the line of centers, but is itself in motion.

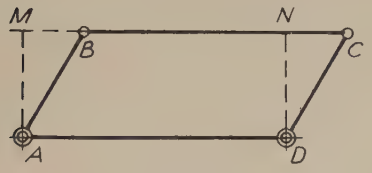

FIG. 6–8

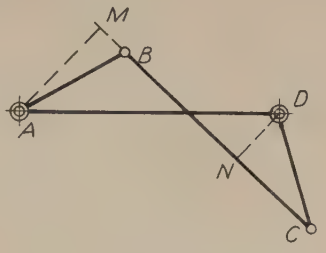

FIG. 6–9

6–11. Non-Parallel Equal Crank Linkage. In the linkage shown in Fig. 6–9 AB is equal to CD and AD is equal to BC. Provision is made, however, to cause the cranks to turn in opposite senses, in which case the perpendiculars AM and DN do not remain equal to each other. Therefore, if the crank AB turns with uniform angular speed, the crank DC has a varying angular speed, although both make one complete turn in the same length of time.

The opposite senses of revolution may be secured by providing some means of causing the cranks to pass the dead points in the proper sense. This may be accomplished by means of some device placed at the instantaneous axis of the connecting rod when in these positions. With AD the fixed link, the centrode of BC will be found to be an hyperbola with A and D as foci, and the corresponding centrode of AD with BC fixed is an equal hyperbola with B and C as foci. Arcs of these hyperbola might be used to aid in passing the dead points. Usually, however, the centrodes of AB and DC are used since they can be shown to be ellipses and therefore closed curves.

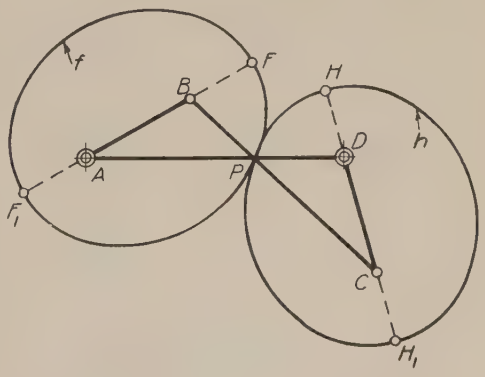

FIG. 6–10

If two equal cylinders are constructed, Fig. 6–10, the right sections of which are of the form of the ellipses f and h, the cylinder f held still, and h roll on f without slip, the points D and C which are the foci of the ellipse h will move about A and B as centers in exactly the same way that they would if the cranks AD and BC were in place.

Now since, as has been shown previously, the relative motion of the links of a four-bar linkage is the same, whichever link is fixed, the elliptical cylinder f may be arranged to turn on a fixed axis at its focus A and the ellipse h similarly pivoted on a fixed axis at its focus D, the distance AD being equal to the major axis. Then the cylinders will be in contact along the line of centers AD (as shown at P), and if no slipping occurs angular motion of one cylinder will cause a corresponding angular motion of the other. Such an arrangement would be the exact equivalent of the linkage shown in Fig. 6–9. In Fig. 6–11, where $ABCD$ is the same linkage as in Figs. 6–9 and 6–10, if the cranks are prolonged as shown and pins placed at H and F_1 with corresponding eyes at F and H_1, these points being the same as the points with the corresponding letters in Fig. 6–10, a means is provided for passing the dead points when the links themselves are used.

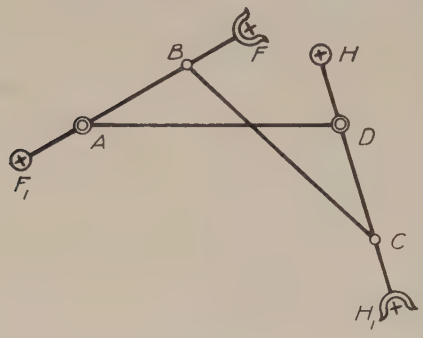

Fig. 6–11

Elliptical gears, equivalent to the rolling cylinders f and h, have been used in machine tools, such as slotters, to give a slow cutting stroke to the tool and a faster return stroke. In applying the gears for such a purpose one of them, as, for instance, f, is on a shaft at A driven at a uniform speed from some external source of power. The other gear h is on a shaft at D to which is attached the crank or other device for moving the ram.

6–12. Equal Crank Linkage. The four-bar linkage shown in Fig. 6–12 differs from that shown in Fig. 6–8 in that the connecting rod BC is

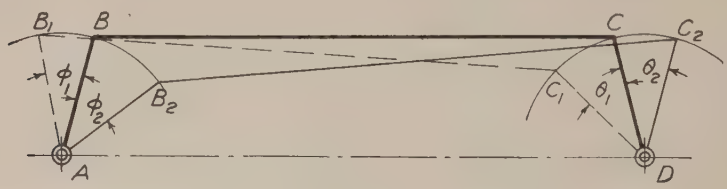

Fig. 6–12

shorter than the fixed link AD. This difference has an important effect on the relative angular motion of the cranks.

In Fig. 6–12 the linkage is drawn in heavy full lines, $ABCD$, in the symmetrical position with BC parallel to AD, giving the angle BAD equal to angle CDA. Now if DC is turned through the angle θ_1 toward

the center then AB will turn through a corresponding angle ϕ_1 which is smaller than θ_1. On the other hand, if DC is turned through the angle θ_2 away from the center AB will turn through the corresponding angle ϕ_2 which is larger than θ_2. This principle is utilized in the steering mechanism of automobiles, as will be explained in the next article.

6–13. Automobile Steering Mechanism. The steering of most automobiles is provided for by pivoting the short shafts or axles, upon which the front wheels rotate, by pins to the main front axle which is

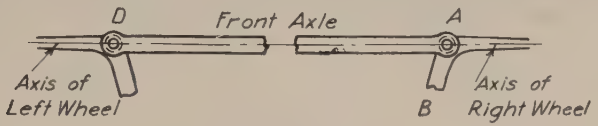

Fig. 6–13

rigidly attached to the rear axle. This is suggested in Fig. 6–13. The direction in which the car moves is controlled by simultaneously turning the wheels about the pivot pins (king pins) A and D.

If the car is making a left turn the axis of the left wheel must swing about the king pin D through a greater angle than the right wheel about A. If a right turn is being made, the reverse condition must exist. The ideal relation between the swing of the two axes would be such that their center lines if extended would always intersect on the center line of the rear axle as shown at I in Fig. 6–14. Then all parts of the car would be moving about a vertical axis through I and the tendency for the wheels to skid would be reduced to a minimum.

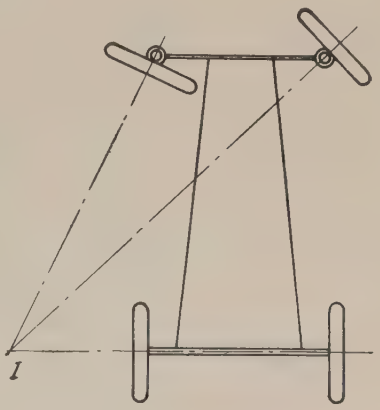

Fig. 6–14

Because of the difficulties of applying a practicable mechanism which would satisfy the conditions illustrated in Fig. 6–14 most automobiles employ a linkage of the type explained in § 6–12. This fulfils the requirement that the axes of the front wheels shall swing through unequal angles according as a left turn or a right turn is being made but does not quite conform to the condition suggested in Fig. 6–14. Arms are attached to the short axles as shown at B in Fig. 6–13, and these arms are connected by a link. Fig. 6–15 shows the linkage in its central position, and Fig. 6–16 shows the same linkage with the wheels set for a right turn. Suitable connections are made from the steering

post to one of the arms DC or AB to give the operator control of the linkage.

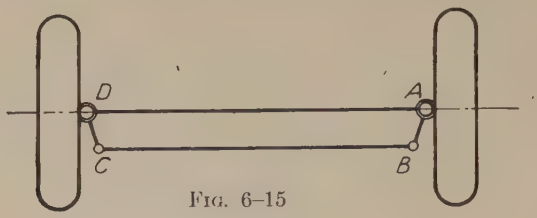

FIG. 6–15

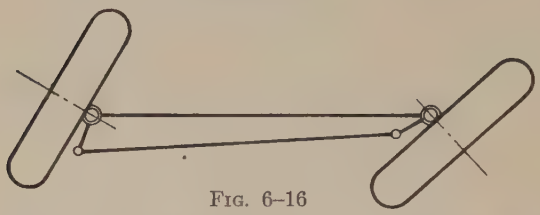

FIG. 6–16

6–14. Slow Motion by Linkwork. The four-bar linkage can, if properly proportioned, be made to produce a slow motion of one of the

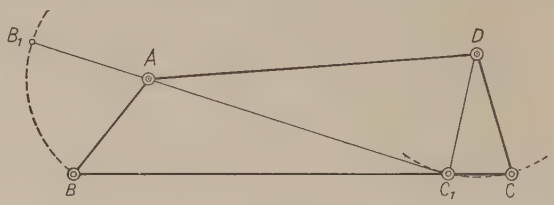

FIG. 6–17

cranks. Such a combination is shown in Fig. 6–17, where two cranks AB and DC are arranged to turn on fixed centers and are connected by the link BC. If the crank AB is turned right handed, the crank DC will also turn right handed, but with decreasing speed, which will become zero when the crank AB reaches position AB_1 in line with the link BC_1. Any further motion of AB will cause the link DC to return toward its first position, its motion being slow at first and then gradually increasing. This type of motion is used in the Corliss valve gear, as shown in Fig. 6–18. The linkage $ABCD$, moving one of the exhaust valves, will give to the crank

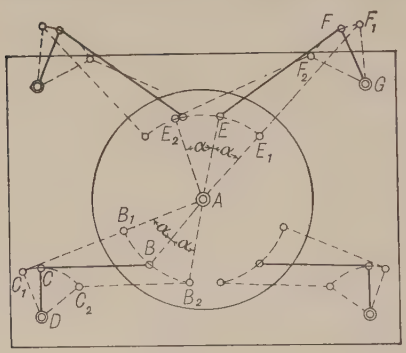

FIG. 6–18

DC a very slow motion when C is near C_1, when the valve is closed, while between C and C_2, when the valve is opening or closing, the motion is much faster. The same is true for the admission valves, as shown by the linkage $AEFG$.

6–15. Linkwork with a Sliding Pair. In Chapter I (§ 1–20), the relation between a linkage such as the one in Fig. 6–19, and the simple four-bar linkage, was shown. It is important that this relation be clearly understood before proceeding, and it is suggested that the reader review that discussion before studying what follows.

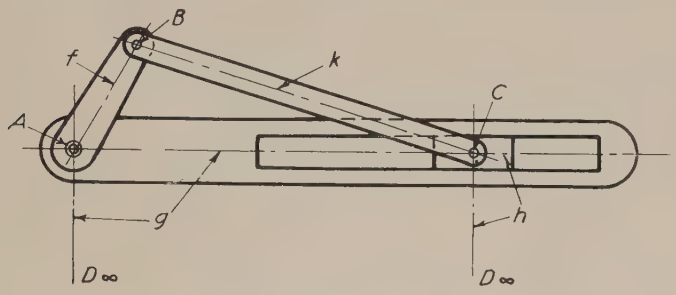

Fig. 6–19

Referring now to Fig. 6–19, the four links of the linkage are AB, BC, CD_∞, and AD_∞ the lines AD_∞ and CD_∞ meeting at infinity, that is, being parallel, and perpendicular to the center line of the slot in g. It should be borne in mind that the line AD_∞ is on the piece g and the line CD_∞ is on the piece h. The piece g and the block h replace, and constitute the equivalent of, the two infinite links AD and CD. Four distinct cases occur in the application of this linkage, depending upon which of the four pieces is fixed. An additional group in which the two finite links f and k are of equal length will be discussed later. These may be grouped and classified as follows:

Group 1. One member of the sliding pair fixed.
- (*a*) Connecting rod longer than the finite crank.
- (*b*) Connecting rod shorter than the finite crank.

Group 2. One member of the sliding pair turning about a fixed axis.
- (*a*) Line of centers longer than the finite crank.
- (*b*) Line of centers shorter than the finite crank.

With g fixed, AD_∞ is the line of centers, f and CD_∞ are the cranks, and k is the connecting rod or coupler. With the block h fixed, CD_∞

is the line of centers, k and AD_∞ are the cranks, and f is the connecting rod or coupler. With k fixed, BC is the line of centers, f and CD_∞ are the cranks, and AD_∞ is the coupler. With f fixed, AB is the line of centers, k and AD_∞ are the cranks, and CD_∞ is the coupler.

Some examples will now be discussed, the basic linkages identified, and in some cases analysis will be made to illustrate the application of the methods, previously explained, for determining velocity and acceleration.

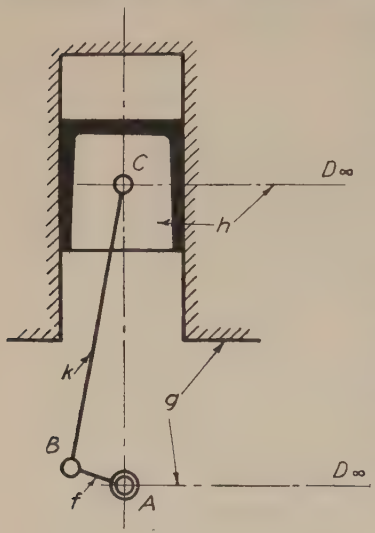

FIG. 6–20

6–16. The Sliding Block Linkage. Fig. 6–20 represents, in skeleton form, the cylinder, piston, connecting rod, crank, and crank shaft of an automobile engine. The pieces bear the same letters as those of the corresponding links in Fig. 6–19. The cylinder g, though not absolutely fixed relative to the earth, is fixed to the frame and hence is to be considered as the fixed piece of the four-bar linkage. The crank shaft at A turns in bearings rigidly attached to the cylinder. Hence the line AD_∞ is the line of centers, f is the finite crank, k the connecting rod, and the line CD_∞ is the infinitely long crank. The piston h receives its impulses from the exploding fuel and is the driving member of the linkage.

The same mechanism occurs in steam engines and belt-driven pumps. In those machines the slider h, known as the crosshead, is connected rigidly to the piston by the piston rod.

In the steam engine the crosshead is the driver of the linkage; in the pump the crank f is the driver.

In the ordinary gasoline engines and steam engines and in most belt-driven pumps the center line BC of the connecting rod k is longer than the center line AB of the crank f; hence the mechanism lies in Group 1, Case (a), of the preceding article.

Displacement of Slider. In Fig. 6–21 the above linkage is represented diagrammatically. C_0C_2 is the path of the point C. The travel C_0C_2 of the slider h is equal to twice the length of the crank AB, and the distance of C from A varies between $BC + AB = AC_0$ and $BC - AB = AC_2$, AB being the length of the crank and BC the length of the connecting rod.

To find the distance the point C has moved from C_0, the beginning of

its stroke or travel, let the angle made by the crank with the line AC_0 be represented by θ, and draw Bb perpendicular to AC_0. The displace-

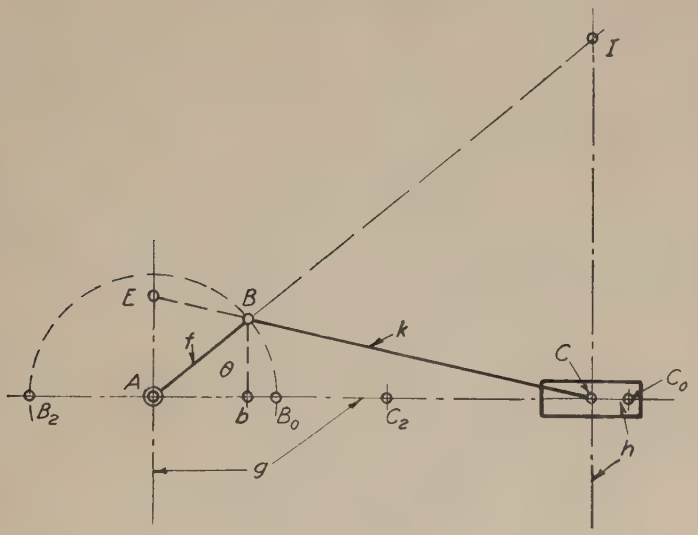

FIG. 6–21

ment of the slider from the beginning of its stroke is, for the angular motion θ of the crank,

$$CC_0 = AC_0 - AC = AC_0 - (Ab + bC)$$

From the right triangle BCb

$$bC = \sqrt{\overline{BC}^2 - \overline{Bb}^2}$$

Hence

$$\begin{aligned} CC_0 &= AC_0 - AB\cos\theta - \sqrt{\overline{BC}^2 - \overline{AB}^2\sin^2\theta} \\ &= AB + BC - AB\cos\theta - \sqrt{\overline{BC}^2 - \overline{AB}^2\sin^2\theta} \qquad (1) \\ &= AB\,(1 - \cos\theta) + BC\left\{1 - \sqrt{1 - \frac{\overline{AB}^2}{\overline{BC}^2}\sin^2\theta}\right\} \qquad (2) \end{aligned}$$

It will be noticed that equation (2) indicates that the displacement differs from that which C would have if its motion were harmonic (assuming AB to turn with uniform speed) by the term

$$BC\left\{1 - \sqrt{1 - \frac{\overline{AB}^2}{\overline{BC}^2}\sin^2\theta}\right\}$$

(see Chapter II, equation 22), and that the value of this term decreases as BC increases relative to AB. That is, the longer the connecting rod is made relative to the crank, the more nearly the motion of the crosshead approaches harmonic motion.

Linear Speed of Slider. It is convenient to be able to determine the speed of the slider for different positions of the stroke when the speed of the crank pin is known. In Fig. 6–21

$$\frac{\text{Linear speed of } C}{\text{Linear speed of } B} = \frac{IC}{IB} \tag{3}$$

Through A draw a line perpendicular to the center line of the slot, and extend the center line of the connecting rod to cut this line at E. Then the triangles ICB and AEB are similar. Hence

$$\frac{IC}{IB} = \frac{AE}{AB}$$

Substituting this in equation (3) gives

$$\frac{\text{Linear speed of } C}{\text{Linear speed of } B} = \frac{AE}{AB} \tag{4}$$

From the similar triangles CAE and CbB

$$\frac{AE}{bB} = \frac{AC}{bC} \quad \text{or} \quad AE = bB\frac{AC}{bC} = bB\frac{Ab + bC}{bC}$$

Whence

$$AE = \frac{AB \sin\theta \left[AB \cos\theta + \sqrt{\overline{BC}^2 - \overline{AB}^2 \sin^2\theta}\right]}{\sqrt{\overline{BC}^2 - \overline{AB}^2 \sin^2\theta}}$$

Substituting this value in (4) gives

$$\frac{\text{Linear speed of } C}{\text{Linear speed of } B} = \sin\theta + \frac{AB \sin\theta \cos\theta}{\sqrt{\overline{BC}^2 - \overline{AB}^2 \sin^2\theta}} \tag{5}$$

This same result may be derived by another method. Let v represent the speed of the crosshead, s its displacement, and t the time during which the displacement has taken place. Then

$$v = \frac{ds}{dt}$$

Letting ω represent the angular speed of AB in radians per unit of time and expressing θ as ωt, equation (1) may be written

$$s = AB + BC - AB \cos\omega t - \sqrt{\overline{BC}^2 - \overline{AB}^2 \sin^2\omega t}$$

Therefore

$$\text{Linear speed of } C = \frac{ds}{dt} = \omega AB \sin \omega t + \frac{\omega \overline{AB}^2 \sin \omega t \cos \omega t}{\sqrt{\overline{BC}^2 - \overline{AB}^2 \sin^2 \omega t}} \tag{6}$$

But the linear speed of $B = \omega AB$. Therefore

$$\frac{\text{Linear speed of } C}{\text{Linear speed of } B} = \sin \omega t + \frac{AB \sin \omega t \cos \omega t}{\sqrt{\overline{BC}^2 - \overline{AB}^2 \sin^2 \omega t}} \tag{7}$$

When $\theta = 90$, $AE = AB$ and the speeds of C and B are equal. To find other values of θ, when C and B have equal speeds. From equation (5)

$$1 = \sin \theta + \frac{AB \sin \theta \cos \theta}{\sqrt{\overline{BC}^2 - \overline{AB}^2 \sin^2 \theta}}$$

Solving this for $\sin \theta$ gives

$$\sin \theta = \frac{BC}{4 \overline{AB}^2} [-BC \pm \sqrt{8 \overline{AB}^2 + \overline{BC}^2}] \tag{8}$$

Acceleration of Slider. Since $a = \frac{dv}{dt}$, where a represents the acceleration, v the linear speed, and t the time, equation (6) may be differentiated giving

$$a = \frac{d}{dt}\left[\omega AB \sin \omega t + \frac{\omega \overline{AB}^2 \sin \omega t \cos \omega t}{\sqrt{\overline{BC}^2 - \overline{AB}^2 \sin^2 \omega t}}\right]$$

$$= \omega^2 AB \cos \omega t + \frac{\omega^2 \overline{AB}^2 (\cos^2 \omega t - \sin^2 \omega t)}{(\overline{BC}^2 - \overline{AB}^2 \sin^2 \omega t)^{\frac{1}{2}}} + \frac{\omega^2 \overline{AB}^4 \sin^2 \omega t \cos^2 \omega t}{(\overline{BC}^2 - \overline{AB}^2 \sin^2 \omega t)^{\frac{3}{2}}} \tag{9}$$

Graphical methods for finding the acceleration of the slider were given in Chapter V. Also, a displacement-time curve may be drawn and differentiated graphically as explained in Chapter II in connection with Fig. 2–7.

6–17. Sliding Slot Linkage. If the block h is fixed so that it can neither turn nor slide, the link CB becomes a crank oscillating about the fixed axis C. The connecting rod BA may make complete turns about the axis A, at the same time that A moves in a straight line, carrying g with it. If BA makes a complete turn relative to A the stroke of g is equal to 2 BA.

Fig. 6–22 illustrates a manner in which this mechanism may be applied. The worm wheel carrying the pin B forms the connecting rod. This wheel may be made to rotate about the axis A by a worm

keyed to the shaft T. The worm and wheel are kept in contact by a piece which supports the bearing of A, hangs from the shaft T, and confines the worm between its bearings. A rotation of the shaft T will

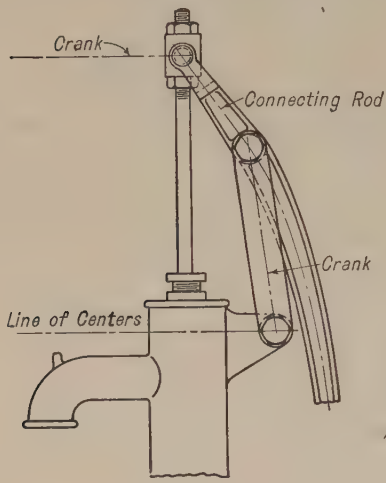

FIG. 6–23

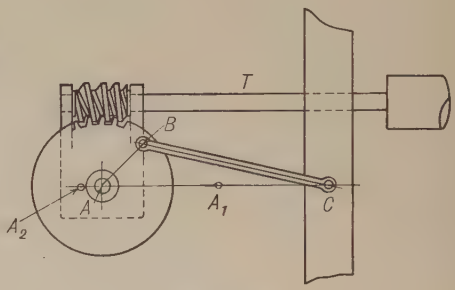

FIG. 6–22

turn the worm wheel, causing a reciprocation of the axis A, and consequently of the driving shaft T, through a distance equal to twice AB.

Fig. 6–23 is another application of this linkage. These mechanisms are examples of Group 1, Case (*b*), of § 6–15.

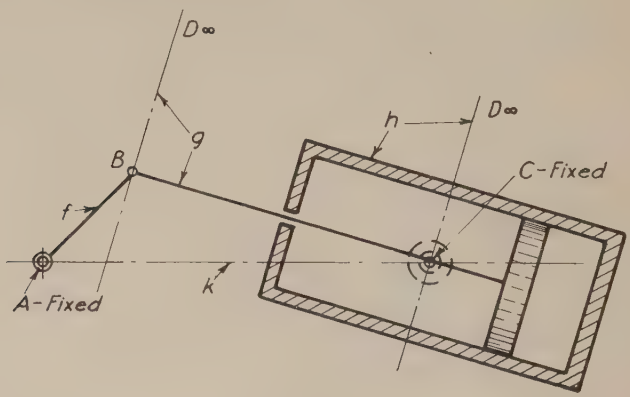

FIG. 6–24

6–18. Swinging or Rocking Block Linkage. Fig. 6–24 is a diagram of the mechanism of an oscillating engine. The parts are lettered to correspond with the equivalent pieces in Fig. 6–19. The cylinder *h*

oscillates on trunnions supported in fixed bearings whose axis is at C. The crank shaft turns in fixed bearings at A. The crank f is pinned to the piston rod g at B. Since A and C are the fixed axes, AC is the line of centers, AB and CD_∞ are the cranks, and BD_∞ is the coupler. It should be noticed that g slides in h instead of over h as it was shown in Fig. 6–19. This, of course, has no effect on the relative motion.

The line of centers AC is longer than the crank AB; hence this mechanism is an example of Group 2, Case (a), of § 6–15.

6–19. Swinging Block Quick-Return Mechanism. Fig. 6–25 is a diagram of the mechanism used for driving the ram on some shapers. The ram, carrying the cutting tool, slides back and forth in fixed guides. As arranged in the figure the tool does its work as it moves from left to right and the driving mechanism is so proportioned that the speed of the ram as it moves toward the right is nearly uniform and of correct magnitude, and the return stroke is made more rapidly.

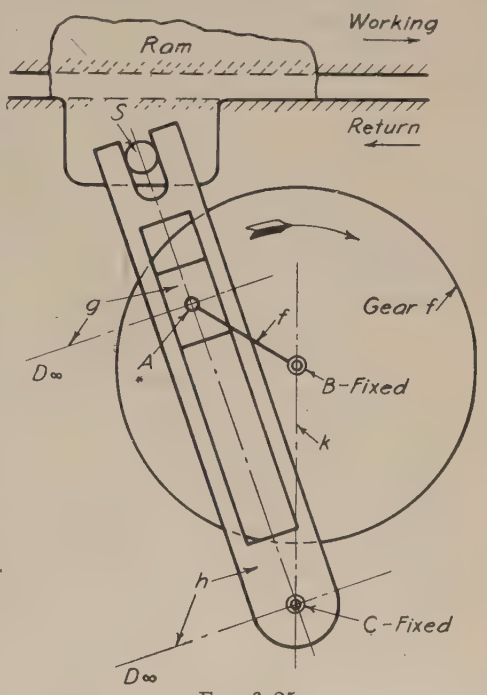

Fig. 6–25

The gear f, driven from the source of power, turns about the fixed axis B. Attached to f is the pin whose axis is A. On this pin is the block g which slides in the slot in the swinging arm h. The arm h oscillates about the fixed axis C.

The parts are lettered to correspond with the equivalent pieces in Fig. 6–19. Attention is called to the fact that the piece g is short while h is long and slides over g, but the relative motions are not affected by this change since g is still connected to f and h to k by pin joints; BC is the line of centers, BA and CD_∞ are the cranks, and AD_∞ is the coupler. The basic linkage is the same as that in the oscillating engine.

Time Ratio of Working Stroke to Return Stroke. The driving crank f, being a part of the gear, turns at uniform angular speed; therefore the ratio of the time during which the working stroke takes place to

the time occupied in returning the ram to its position to begin the next working stroke is equal to the ratio of the angles through which f turns during these respective motions.

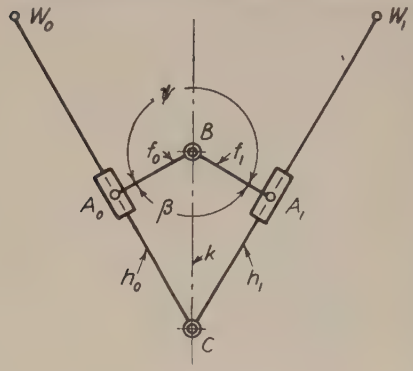

FIG. 6–26

This may be seen by referring to Fig. 6–26, which is a diagram of the same mechanism as Fig. 6–25, drawn to a smaller scale. When the mechanism is in the position BA_0C with BA_0 perpendicular to CW_0 the arm h is in its extreme left-hand position ready to begin the working stroke of the ram. When BA is in the position BA_1, again perpendicular to CW_1, the working stroke is complete and the return stroke about to begin. Hence BA turns through the angle ψ during the working stroke and through the angle β during the return stroke.

Therefore

$$\frac{\text{Time of working stroke}}{\text{Time of return stroke}} = \frac{\psi}{\beta} \tag{10}$$

Angular Speed of Swinging Arm. Let ω_f be the angular speed of the driving crank f and ω_h the angular speed of the swinging arm h. See Fig. 6–27.

Since BC is the line of centers, f and CD_∞ the cranks, and AD_∞ the coupler, it follows from Chapter IV, equations (7) and (8), that

$$\frac{\omega_h}{\omega_f} = \frac{x}{y} = \frac{BM}{CA} \tag{11}$$

I_{fh} is the centro of f and h, and BM is parallel to CA.

Velocity of Ram. S is the axis of the pin attached rigidly to the ram and embraced by the fork on the end of h. W is a point on h lying on the axis of S. Then the velocity of the ram is equal to the component, parallel to the path of S, of the velocity of W, the other component being along the slot.

$$v_W = \omega_h \rho = \omega_f \rho \frac{x}{y} \tag{12}$$

The vector Ww_1 for v_W may be drawn, and its components Ww_2 in the direction in which S is moving and Ww_3 along the slot may be found as shown. Ww_2 is then the velocity imparted to S.

A simpler method of finding v_S is as follows: E_{Sh} is the " phorograph " of S on h (see Chapter IV, § 4–11); hence the velocity of S is the same as the velocity of E_{Sh}. Denote this velocity by v_E. Then

$$v_S = v_E = \omega_h \cdot z \quad \text{or} \quad v_S = \omega_f \cdot \frac{xz}{y} \tag{13}$$

The whole solution might be carried out by means of velocity vectors, but equation (13) is more convenient and less likely to involve inaccuracies. The distances x, y, and z might be computed, but they can be determined with sufficient accuracy by measuring the drawing. In making a complete analysis of the motion of the ram for an entire cycle it is convenient to assume ω_f equal to 1 radian per unit of time.

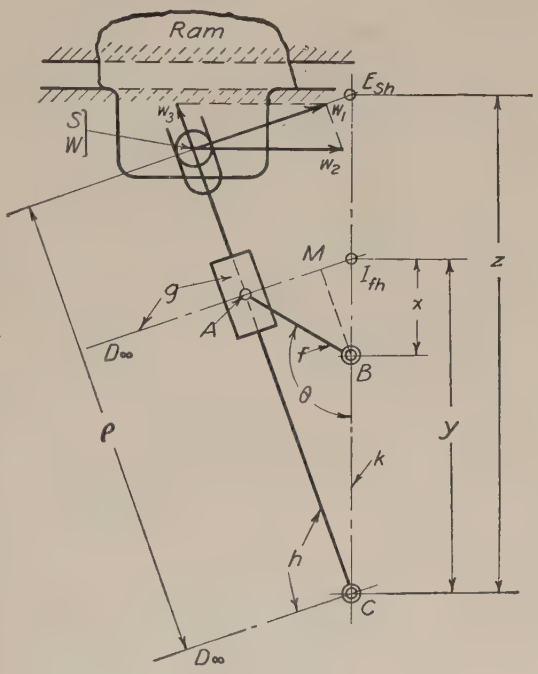

FIG. 6–27

Angular Acceleration of Driven Arm. Referring to Fig. 6–28, which represents the same mechanism as Figs. 6–25 to 6–27 inclusive, let A be a point on the axis of the pin attached to crank f, and let P represent a point on h coincident with A. Suppose that it is desired to find the angular acceleration α_h of the bar h. Let F represent the length BA of the driving crank. Assume that ω_f is constant. Then the only acceleration which A has is its normal acceleration relative to the fixed axis B. That is

$$a_A = a_A{}^N = \omega_f{}^2 \cdot F$$

This is represented in the figure by the vector Aa_5.

Next find the total component of Aa_5 along the coupler, that is, along AD_∞ normal to the sliding.

Now from Chapter V, equation (19), and the text following that equation, the acceleration of A relative to P along the coupler is

$2\,AE_{Ah} \cdot \omega_h^2$, where E_{Ah} is that point on h which has the same velocity as A (the phorograph of A on h), and the sense of this acceleration of A relative to P is from E_{Ah} toward A.

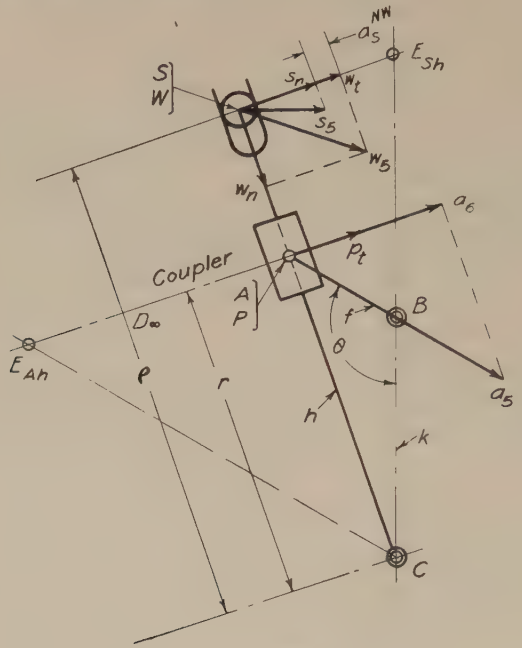

FIG. 6–28

We have then $a_A{}^{NP} = 2\,AE_{Ah} \cdot \omega_h^2$ toward the right in the figure since E_{Ah} is at the left of A, or

$$a_P{}^{NA} = 2\,AE_{Ah} \cdot \omega_h^2 \text{ toward the left}$$

Find ω_h from equation (11). Measure AE_{Ah}, and compute the value $a_P{}^{NA}$ from the equation just given. Lay off from a_6 the distance representing this quantity at the same scale used for Aa_5. This gives the point p_t. Then Pp_t is the vector representing the total acceleration of P along the coupler. Therefore, since the axis C is on a line perpendicular to the coupler, Pp_t represents $a_P{}^{TC}$, the tangential acceleration of P relative to the fixed axis C. Then from Chapter V, equation (1)

$$\alpha_h = \frac{a_P{}^{TC}}{r}$$

If the point E_{Ah} does not fall within the limits of the drawing the quantity $a_A{}^{NP}$ may be found by using equation (17), Chapter V, bearing in mind that the quantity S in that equation is the velocity of A relative

to P, and may be found by drawing the velocity vector for A and resolving it into components along the slide and in the direction in which P is moving.

Acceleration of the Ram. In order to find the linear acceleration of the ram it is necessary first to find the tangential acceleration vector for that point W on h which coincides with the axis S of the pin on the ram. This acceleration is $a_W{}^{TC} = \alpha_h \cdot \rho$ and is laid off at Ww_t perpendicular to WC. This point W also has a normal acceleration toward C which is equal to $\omega_h{}^2 \cdot \rho$. Since, however, the center line of the slot at W coincides with the radius CW, this normal acceleration does not affect S. From equation (19) in Chapter V, $a_S{}^{NW}$, the acceleration of S relative to W perpendicular to the slot is $2\,\omega_h{}^2 \cdot SE_{Sh}$. Compute this quantity and lay it off along Ww_t from w_t towards W as shown. This gives Ss_n as the total component of the acceleration of S perpendicular to CW. Now, since a_S must lie along the path of S, draw a perpendicular to Ss_n at s_n. This intersects the path of S at s_5, giving Ss_5 as the vector for a_S.

Computation of Angular Speed and Acceleration of Arm. The angular speed ω_h and the angular acceleration α_h may be computed if desired. In Figs. 6–27 and 6–28 let K equal the length BC and F equal the length BA.

As has been seen already

$$\omega_h = \frac{BM}{r} \cdot \omega_f \tag{14}$$

in which

$$BM = \frac{F^2 - FK\cos\theta}{\sqrt{F^2 + K^2 - 2FK\cos\theta}}$$

and

$$r = \sqrt{F^2 + K^2 - 2FK\cos\theta}$$

Substituting these values in equation (14) gives

$$\omega_h = \frac{\omega_f(F^2 - FK\cos\theta)}{F^2 + K^2 - 2FK\cos\theta} \tag{15}$$

Putting $\theta = \omega t$ and differentiating with respect to t we get

$$\alpha_h = \omega_f{}^2 \cdot FK\sin\theta\left[\frac{K^2 - F^2}{(F^2 + K^2 - 2FK\cos\theta)^2}\right] \tag{16}$$

Modified Swinging Block Quick Returns. In the preceding example the end of the swinging arm h is forked and embraces a pin S rigidly attached to the ram.

The pin S might be rigidly attached to the arm and drive a forked lug attached to the ram. This change would have a minor effect on the velocity of the ram. The method of analysis would be the same as before.

Fig. 6–29 is a drawing of a swinging block quick-return drive in which the end of the arm is connected to the ram by a link lettered H. The axes B, A, and C are lettered to correspond to those in Fig. 6–27, but the other letters have no significance in relation to the earlier figures.

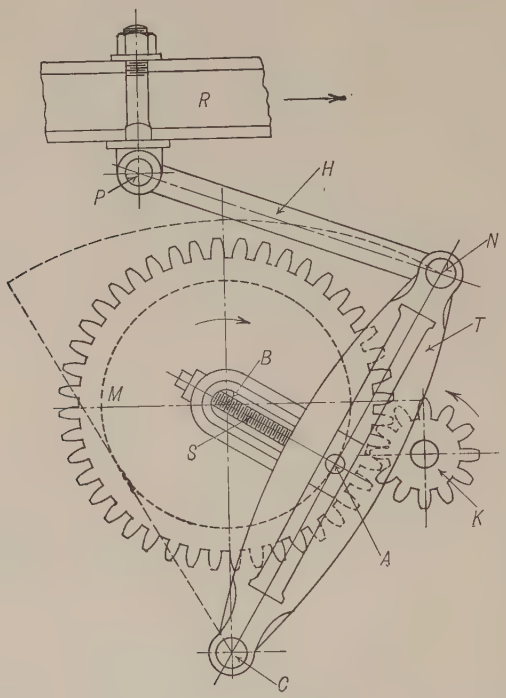

Fig. 6–29

The method of analysis up to the point N (corresponding to W in Fig. 6–27) is the same as the former case. The velocity and acceleration of N having been found, the corresponding velocity and acceleration for the ram are determined by the ordinary methods given in Chapters IV and V.

In some machines the swinging arm is pinned directly to the ram, and the axis C, instead of being fixed, is carried by a short link supported on a fixed axis. (See Fig. 4–30, page 61.) The analysis of this mechanism is quite different from the cases just discussed. The

velocity of the ram may be determined by means of vectors by the application of the principles suggested in Chapter IV in connection with Fig. 4–30. The acceleration of the ram may be determined by vectors but involves certain constructions which were omitted from Chapter V as being beyond the scope of the present book.

A satisfactory approximate method for obtaining the acceleration of the ram is to plot a velocity-time curve and make a graphical differentiation of this curve as explained in Chapter II, Fig. 2–7.

6–20. Turning Block Linkage. Fig. 6–30 is a diagram of the same type of linkage as Fig. 6–19 with the link f fixed. AB is now the line

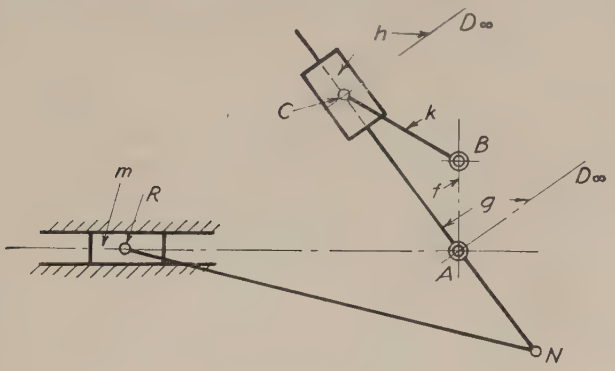

Fig. 6–30

of centers, BC a crank, AD_∞ (on g) the second crank, and CD_∞ on block h the coupler. Since BA is shorter than BC this mechanism is

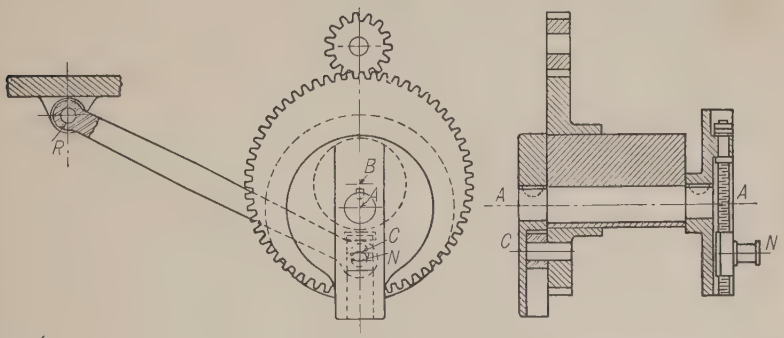

Fig. 6–31

an example of Group 2, Case (*c*), § 6–15. The bar g is prolonged to N and drives a slider m through a connecting rod NR. The slider m represents the ram of a shaper or the platen of a metal planer. The linkage when used in this way is known as the Whitworth quick-return

mechanism. Its action is similar to that of the swinging block quick return discussed in the preceding article. The essential difference is that the crank g in Fig. 6–30 makes complete revolutions with variable angular speed while the arm h in Fig. 6–25 oscillates.

The methods given in § 6–19 for analyzing the motion of the swinging block mechanism apply equally well to the turning block or Whitworth quick-return mechanism.

Fig. 6–31 is a drawing of an actual Whitworth quick-return assembly. The axes are lettered to correspond with those in Fig. 6–30. The length of the crank AN may be changed by an adjusting screw shown at the right, thus changing the length of stroke of the slider.

6–21. Shape and Size of the Links and Connecting Pairs. It has already been pointed out that the character of the relative motions of the members of a four-bar linkage depends only upon the relative lengths of the basic lines of the several links as defined in § 6–2.

The shape and size of the rigid pieces which constitute the actual links do not affect the kinematic properties in any way. The shape and size are determined by dynamic considerations and by the demands for convenience in manufacture and application.

A few examples will now be given to show how the parts may be shaped to accommodate the conditions under which they are to be used.

Radius of Crank Shaft Greater Than Length of Crank. Referring to Fig. 1–15, page 8, the length of the crank center line AB is much greater than the radius of the crank shaft f_1, so that the actual crank f is made a separate piece keyed to f_1 and carrying the crank pin f_2.

It often happens that the desired motion of the piece driven from the crank is so small that the corresponding length of the crank AB is less than the radius which is required for the shaft f_1.

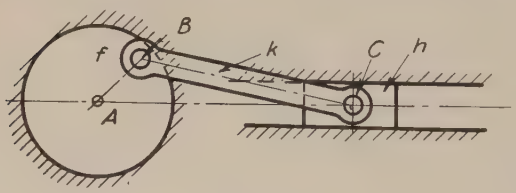

FIG. 6–32

Fig. 6–32 shows an arrangement by which this may be accomplished provided the crank can be at the end of the shaft, outside the bearing. The crank pin B is driven into a hole in the shaft, or otherwise rigidly attached to the shaft. The effective crank length is AB, the shaft itself constituting the actual crank member. It is evident that this must be at the end of the shaft.

Eccentric. If a crank is to be placed on a shaft anywhere other than at the end, neither the crank shown in Fig. 1–15 nor that in Fig. 6–32 can be used because the connecting rod would interfere with the shaft

as the crank revolved. One common arrangement of the parts is as shown in Fig. 6–33. Here the radius of the crank pin is more than the crank length plus the radius of the shaft. That is, the crank pin is a large disk with a hole in it to fit over the shaft to which it is keyed. The end of the connecting rod is enlarged to correspond.

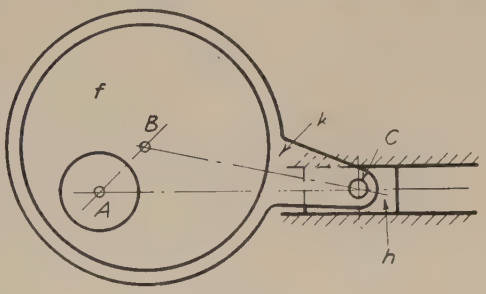

Fig. 6–33

The crank pin is now the body constituting the actual crank, and is called an **eccentric.** The piece k constituting the connecting rod is called an **eccentric rod.** That portion of the eccentric rod surrounding the eccentric is the **eccentric strap.** The distance AB from the center of the eccentric to the axis of the shaft is the **eccentricity.** This distance may be made as small as necessary to produce the desired length of stroke for the slider.

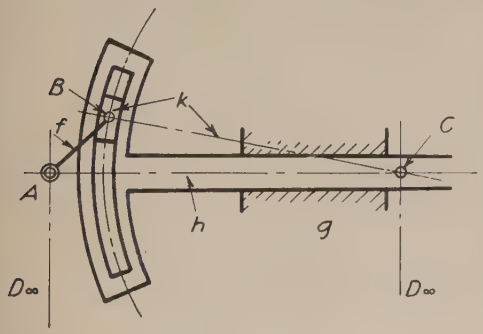

Fig. 6–34

6–22. Linkages with Two Sliding Pairs. Fig. 6–34 shows the effect of a combination of one sliding pair, giving the equivalent of two infinite links AD and CD, and two links changed in form as suggested in § 6–21. The block h is extended and a curved slot made in it, the center of the slot being at C. The block k is connected to the crank f by a pin joint.

As the crank f turns, the block moves in the slot and the point B remains a constant distance BC from C. Hence the line BC is the coupler and the piece h has the same motion that it would have if it were a short block connected to B as in previous figures.

AD is the line of centers, AB and CD the cranks and the radial line, BC the coupler or connecting-rod equivalent.

Fig. 6–35 represents the mechanism which results when the radius of the slot in h instead of being finite as in Fig. 6–34 is made infinite, the center line YY being perpendicular to the direction of motion of h. AB is the crank, AD_∞ the line of centers, BC the coupler, and the second crank $C_\infty D_\infty$ is an imaginary line perpendicular to BC.

Applying equation (2), page 103, and giving BC a value infinity, shows that the displacement of the slider h from its extreme right-hand position becomes $AB\ (1 - \cos\theta)$. Hence h has simple harmonic motion. This mechanism is sometimes referred to as the *Scotch yoke.*

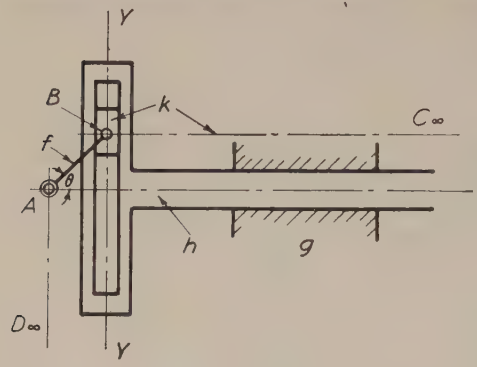

Fig. 6–35

An eccentric may be used instead of the crank AB and the block k. The eccentric may work directly in the slot or it may revolve in a hole in the block k. In either arrangement the effect is the same as that of the crank and block in Fig. 6–35.

Fig. 6–36 seems to resemble Fig. 6–35, the only apparent difference being that the center line YY of the slot makes an angle β, less than 90°, with the direction of motion of the piece which carries it. If this mechanism were traced back to its elementary four-bar linkages it would be found to have been derived from two four-bar linkages with a common crank.

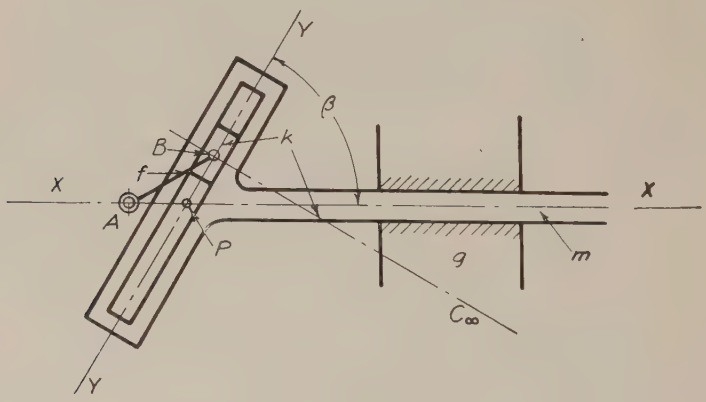

Fig. 6–36

Such an analysis would be long and would not help much toward an understanding of the motion. Therefore it is omitted.

The slider m may be shown to have simple harmonic motion over a path longer than twice the length of the crank AB. In Fig. 6–37, Y_0Y_0 and Y_2Y_2 drawn tangent to the path of B are the positions of the line YY when at the extremes of its stroke. It intersects at P_0 and P_2

the line XX which is drawn through A parallel to the direction of motion of m. The length of stroke of m is therefore P_0P_2, which is equal to $\frac{2\,AB}{\sin\beta}$.

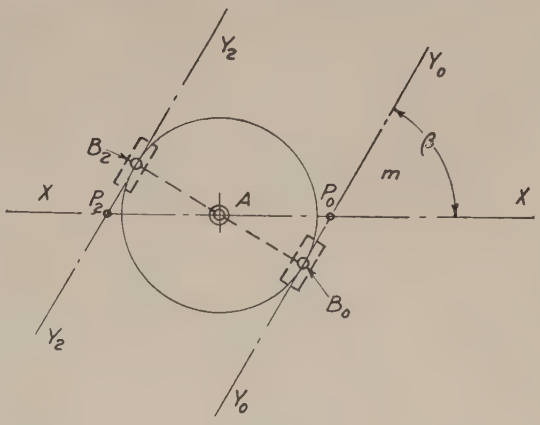

FIG. 6–37

To show that the motion of m is harmonic. In Fig. 6–38, which is lettered to correspond to Fig. 6–37, the crank AB has turned through an angle θ to move P from P_0 to its present position. From the similar triangles AP_0B_0 and APC

$$\frac{P_0P}{AP_0} = \frac{B_0C}{AB_0} = \frac{AB\,(1 - \cos\theta)}{AB}$$

or

$$P_0P = AP_0\,(1 - \cos\theta)$$

Therefore the motion of P and hence of the whole body m is harmonic.

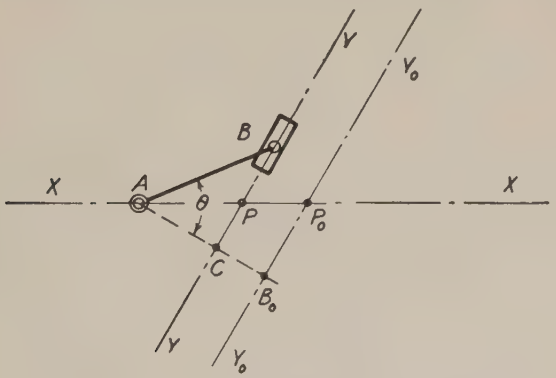

FIG. 6–38

6–23. The Isosceles Linkage. If the link BC (Fig. 6–19) is made equal to AB, the four mechanisms corresponding to those discussed in §§ 6–16 to 6–20 reduce to two as a result of this equality in length of the two finite links.

If either one of the sliding pairs is fixed the resulting mechanism is the same, and is known as the isosceles sliding block linkage.

Similarly, if either AB or BC is fixed the mechanism formed may be called the isosceles turning block linkage.

The Isosceles Sliding Block Linkage. If in Fig. 6–39 the piece T is fixed, AB is the driver, and C starts from the position C_1, it will be found when the crank AB is at an angle of 90° with AC_1 (the path of C) that C is directly over A and any further rotation of AB will cause only a similar rotation of CB. In order to cause C to continue in its path from this position it will be necessary to pair points on the

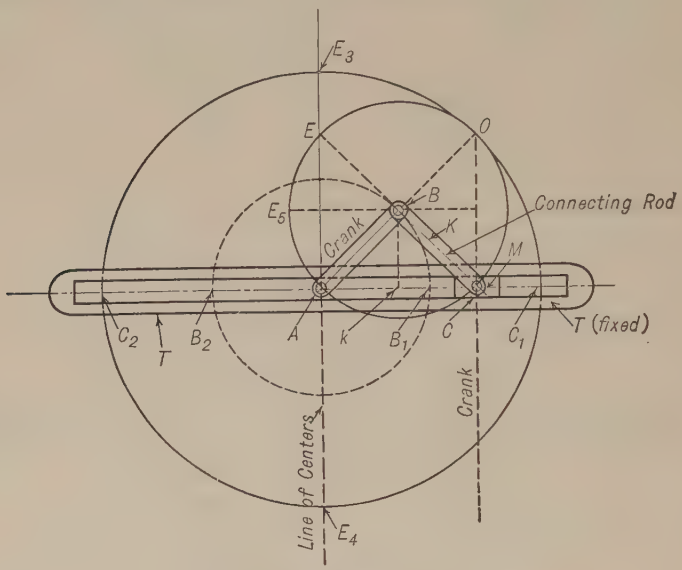

FIG. 6–39

centrode of BC for this position (when T is fixed) with the corresponding points on the centrode of T (when BC is fixed) as was done in the case of the anti-parallel crank linkage in Fig. 6–11.

The centrode of BC is the circle drawn about A as a center with radius 2 AB. This can be seen as follows:

In any position of the linkage, as that occupied in Fig. 6–39, produce AB to meet the perpendicular to AC_1, through C, at O, thus finding the instantaneous axis for that position. From B draw Bk perpendicular to AC_1; then, since ABC is an isosceles triangle, $Ak = kC = \frac{AC}{2}$.

Hence, from the similarity of the triangles AOC and ABk, $AB = \frac{AO}{2}$.

This holds for every position of the linkage. Therefore the locus of O, the instantaneous axis of BC, is the circle with radius 2 AB.

A similar method of reasoning can be followed to show that the centrode of T, with BC fixed, is a circle about B with radius BA.

From the properties of centrodes previously brought out, if the link BC is made fast to a disk of radius AB ($= BC$) with the point B at its center and C on its circumference, and this disk is rolled inside a fixed hollow cylinder of twice its own diameter, BC will have the same motion that it would if it were the connecting rod of the actual four-bar linkage ABC, and C will travel on a diameter of the larger circle.

It is evident that, since BC is a radius of the centrode of T (that is, of the disk just referred to) and C has a motion along the diameter C_1AC_2, if BC is prolonged to E, making BE equal to BC, E will travel the diameter E_3E_4, being at A when C is at C_1, at E_3 when AB and BC are perpendicular to C_2AC_1 above C_1AC_2, at A again when C is at C_2, and at E_4 when AB is perpendicularly under C_1AC_2.

If, now, when the actual linkage is used with the connecting rod prolonged to E, a pin is centered at E and corresponding fixed eyes at E_3 and E_4, a means is provided for causing C to continue in its path when AB is in the 90° positions.

It should be noticed that the paths of the points C and E, Fig. 6–39, as shown above, when considered as points of the circumference of the smaller circle (that is, on the surface of the centrode of T), are hypocycloids with the circle AO as the directing circle and circle BO as the generating circle. From this it is evident that the prolongation BE need not be in the same line as BC but may be at any angle as at BE_5, provided the eye is properly located.

If the crank AB turns at uniform angular speed, C has harmonic motion over the path C_1AC_2 for C is always found at the foot of the perpendicular OC and O is always on the line AB produced, distant $2\,AB$ from A. This agrees with the description given for harmonic motion in Chapter II.

In Fig. 6–40, lettered to correspond to Fig. 6–39, the actual crank AB is omitted and a block is placed at the end of the rod BE to guide E in a slot whose center line is a straight line passing through A. The nature of the linkage remains the same as in Fig. 6–39. The imaginary line joining B, the middle point of EC, to A, the point of intersection of the center lines of the slots, is still the theoretical crank, and, if motion is imparted to C, B will move in a circular path about A. The whole may be thought of as two four-bar linkages $ABCD$ and $ABED_1$, with the crank AB common to the two linkages.

The Elliptic Trammel, which is so commonly used for drawing ellipses, is an application of the principle of the isosceles sliding-block linkage.

Referring to Fig. 6–41, if any other point, as P, on the rod CE or CE prolonged, is chosen, P can be shown to move in a path which is an

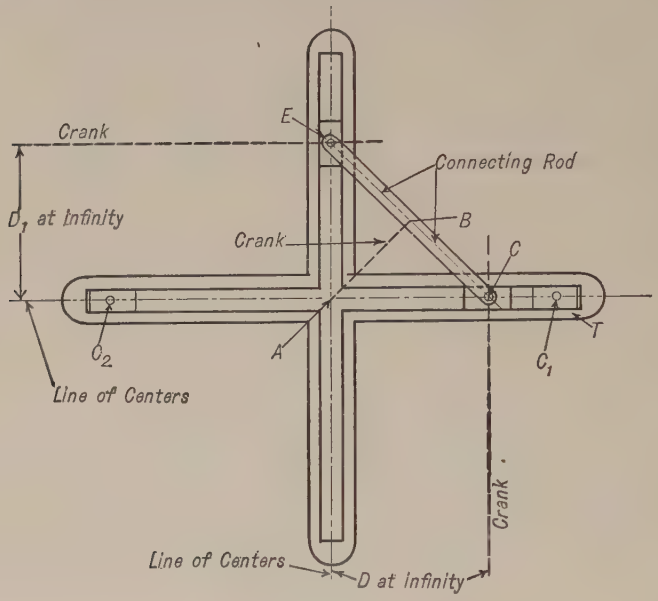

Fig. 6–40

ellipse with axes lying along the paths of C and E and with semi-axes equal in length to PE and PC. If PC is less than PE the minor axis

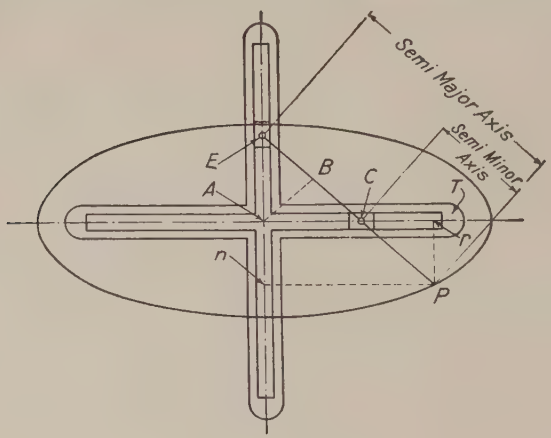

Fig. 6–41

lies along the path of E, as in the figure. If PE is less than PC the minor axis lies along the path of C.

In the elliptic trammel the mechanism is usually applied in the form corresponding to Fig. 6–41 and the ellipse is usually traced by an adjustable point P outside of E or C as in the figure; E and C are made so that their distance apart is adjustable and they are set one-half the difference of the major and minor axes apart.

An ellipse can be readily drawn by taking a card one corner of which shall represent the tracing point P. Points corresponding to the desired positions of E and C are then marked on the edge of the card, and by placing these points in successive positions on lines at right angles with each other, corresponding to the slots in which the blocks in Fig. 6–41 move, and marking the successive positions of P, will give a series of points on the required ellipse.

To prove that the point P moves on an ellipse, let $Pn = x$; $Pr = y$; PE (semi-major axis) $= a$; PC (semi-minor axis) $= b$.

The equation of an ellipse referred to the center as the origin is

$$\frac{x^2}{a^2} + \frac{y^2}{b^2} = 1$$

In Fig. 6–41

$$\frac{x}{a} = \frac{Pn}{PE} \quad \text{and} \quad \frac{y}{b} = \frac{Pr}{PC}$$

and, since the triangles nPE and rCP are similar,

$$\frac{Pr}{PC} = \frac{nE}{PE}$$

Therefore

$$\frac{Pn}{PE} + \frac{Pr}{PC} = \frac{Pn}{PE} + \frac{nE}{PE}$$

and, in this case,

$$\frac{\overline{Pn}^2}{\overline{PE}^2} + \frac{\overline{Pr}^2}{\overline{PC}^2} = \frac{\overline{Pn}^2}{\overline{PE}^2} + \frac{\overline{nE}^2}{\overline{PE}^2} = \frac{\overline{Pn}^2 + \overline{nE}^2}{\overline{PE}^2} = 1$$

Therefore

$$\frac{x^2}{a^2} + \frac{y^2}{b^2} = 1$$

showing that the locus of P is an ellipse.

By fixing the link BC, Fig. 6–39, or, the equivalent, fixing the centers C and E (allowing the blocks to turn), Fig. 6–40 or 6–41, the mechanism corresponding to the swinging block linkage, Fig. 6–25, is obtained.

Two examples will be considered in which this linkage is expanded in the manner suggested in Figs. 6–40 and 6–41.

The Elliptic Chuck depends upon the principle proved for the elliptic trammel and upon the principle, previously referred to, that the *relative* motions of the parts of a linkage are independent of the fixedness of the links.

Now in drawing an ellipse with a trammel, the paper is fixed, and the pencil is moved over it; but in turning an ellipse in a lathe, the tool, which has the same position as the pencil, is fixed, and the piece to be turned should have such a motion as would compel the tool to cut an ellipse. This is accomplished in the elliptic chuck, in which the spindle of the lathe, with a block on it, corresponds to the axis E of Fig. 6–41. In another fixed bearing whose axis corresponds to C is another shaft having a block on it. The point of the cutting tool is in a fixed position corresponding to P.

The piece carrying the work corresponds to T and has two slots at right angles, sliding over the blocks on the spindle and the axis C. The turning of the spindle causes the point of intersection of the center lines of these slots to move in a circle about the point B and the whole piece to have such a motion that the point of the tool cuts an ellipse from the material attached to it.

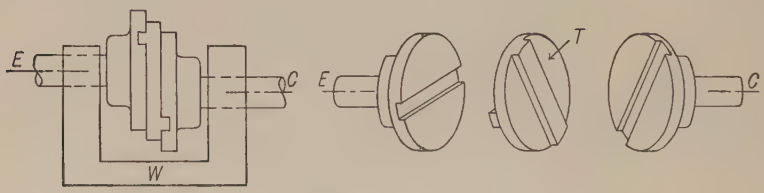

Fig. 6–42

The Oldham's Coupling shown in Fig. 6–42 is an interesting example of this form of linkage. The axis E of the upper shaft corresponds to E in Fig. 6–41, and the slotted disk on this shaft corresponds to the block at E; similarly, with the shaft at C. The intermediate disk T with two projections at right angles across its diameters replaces the cross T.

The object of the device is to connect two parallel shafts placed a short distance apart so as to communicate uniform rotation from one to the other.

If the link AB, Fig. 6–39, is made the stationary link the result is the same, kinematically, as the linkage discussed in the last two illustrations. The details of application are somewhat different. If T is on a shaft centered at A the crank BC, through the arm T, will cause the shaft at A to turn at an angular speed equal to one-half its own. There may be two arms BC and BE with corresponding slots, the result being the equivalent of a two-toothed wheel driving, internally, one of four

teeth. If there were three arms and three slots the equivalent gears would have three and six teeth.

6–24. A Straight-Line Mechanism is a linkage designed to guide a reciprocating piece either exactly or approximately in a straight line, in order to avoid the friction arising from the use of straight guides. Some straight-line mechanisms are exact, that is, they guide the reciprocating piece in an exact straight line; others, which occur more frequently, are approximate, and are usually designed so that the middle and two extreme positions of the guided point shall be in one straight line, while at the same time care is taken that the intermediate positions deviate as little as possible from that line.

Scott Russell's Mechanism. The isosceles linkage, Fig. 6–39, may be modified to eliminate the sliding pair and still guide the point E in a path which is very nearly a straight line. In Fig. 6–43 the crank AB oscillates through an angle 2θ. AB, BC, and BE are equal. Then,

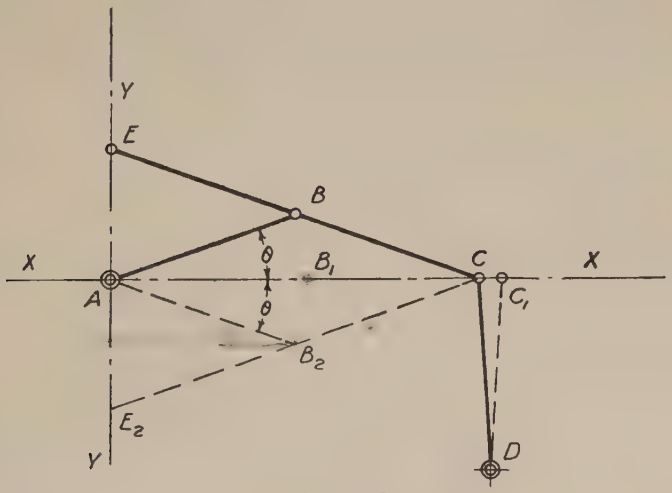

Fig. 6–43

as has already been shown, if C were guided along the straight line XX, E would move along the line YY perpendicular to XX. If the point C is guided by a crank DC whose fixed axis D is on a perpendicular to XX drawn from a point midway between the extreme positions C and C_1, then E will still be on YY at E, A, and E_2 but will deviate slightly between these positions. Increasing the length of DC reduces the deviation of E from the line YY. Hence DC should be made as long as possible. The angle θ should be small.

The mechanism may be still further modified so that the path of E shall be at one side of A instead of through A. In Fig. 6–44 the parts

are so proportioned that BC is a mean proportional between AB and BE. That is

$$\frac{AB}{BC} = \frac{BC}{BE}$$

By drawing the linkage in a series of positions it will be seen that E follows the line YY very closely provided the maximum value of the angle θ is small. A mathematical proof of this condition depends upon the assumption that $\sin \theta = \theta$ very nearly when θ is small.

Watt's Straight-Line Mechanism. Fig. 6–45 shows a four-bar linkage so arranged as to guide a point P located on the connecting rod, in a complex path, a part of which YY is approximately a straight line perpendicular to the parallel position of the cranks AB and DC.

The following equations, given here without demonstration, will serve as a guide in laying out such a linkage. Given the location of the fixed axes A and D, the position of the line YY along which the point P is to be guided, and the desired length of stroke S. To find AB, BC, DC, and locate the point P. Draw AF and DH perpendicular to YY. Then

$$AB = AF + \frac{S^2}{16\ AF} \tag{17}$$

$$DC = DH + \frac{S^2}{16\ DH} \tag{18}$$

Join B and C, and P will be the point where BC cuts YY. Note also that $\frac{FB}{HC} = \frac{FP}{HP} = \frac{BP}{CP}$.

Robert's Straight-Line Mechanism. Fig. 6–46 is a four-bar linkage in which the cranks AB and DC are equal and the connecting rod BC is one-half as long as the line of centers AD. P is a point rigidly attached to the connecting rod and lying on the mid point of AD when BC is parallel to AD. The triangles ABP and DCP are therefore equal isosceles triangles for this position. BPC is also isosceles. The cranks may swing to the right until BC and AB are in a straight line and to the left until BC and DC are in a straight line. In two positions near the extremes P will be at D and A and in mid position P will be at the mid point of AD. The length of AB and DC should be not less than about 0.6 AD and if made longer will cause less deviation of P from the line AD.

Tchebicheff's Straight-Line Mechanism. In Fig. 6–47 the links are made in the following proportion:

$$AD = 4, \quad AB = DC = 5, \quad BC = 2$$

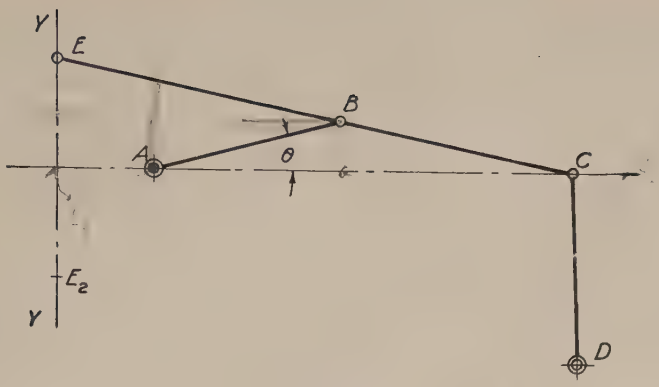

FIG. 6–44

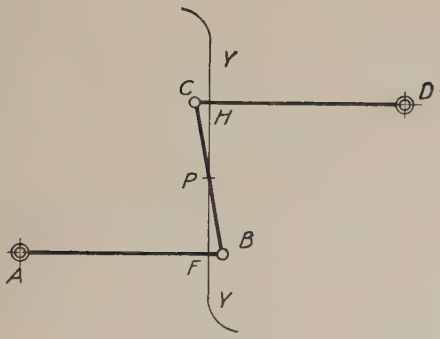

FIG. 6–45

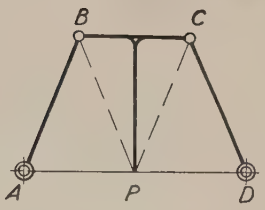

FIG. 6–46

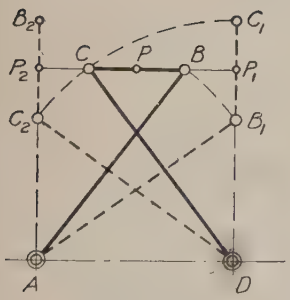

FIG. 6–47

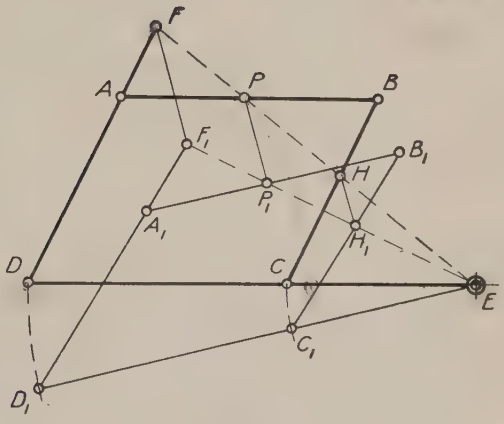

FIG. 6–48

The guided point P is at the mid point of BC. With these proportions, when the crank AB has turned to the position AB_1, where B_1 is on the perpendicular to AD through D, C and P will be at C_1 and P_1 respectively on the same perpendicular. Similarly, when C is perpendicularly above A, P will be on the same perpendicular. Therefore P is on the line P_1PP_2 parallel to AD in three positions. Between these positions it deviates slightly from that line.

Other Types of Straight-Line Mechanisms. Many other devices have been employed for guiding a point in a path which is approximately rectilinear without the use of sliding pairs. The examples given will serve to illustrate the principle and suggest the method of approach when designing such a device.

One further example exists in the mechanism shown in the data for Prob. IV-14, on page 69. This is known as Peaucellier's cell, and when it is proportioned as there shown the point B moves on an exact straight line perpendicular to the center line drawn through the two fixed axes.

6–25. The Pantograph. The pantograph is a four-bar linkage so arranged as to form a parallelogram $ABCD$, Fig. 6–48. Fixing some point in the linkage, as E, certain other points, as F, P, and H, will move parallel and similar to each other over any path either straight or curved. *These points, as F, P, and H, must lie on the same straight line passing through the fixed point E, and their motions will then be proportional to their distances from the fixed point.* To prove that this is so, move the point F to any other position, as F_1; the linkage will then be found to occupy the position $A_1B_1C_1D_1$. Connect F_1 with E; then H_1, where F_1E crosses the link B_1C_1, can be proved to be the same distance from C_1 that H is from C, and the line HH_1 will be parallel to FF_1.

In the original position, since FD is parallel to HC, we may write

$$\frac{FD}{HC} = \frac{DE}{CE} = \frac{FE}{HE}$$

In the second position, since F_1D_1 is parallel to H_1C_1 and since F_1E is drawn a straight line, we have

$$\frac{F_1D_1}{H_1C_1} = \frac{D_1E}{C_1E} = \frac{F_1E}{H_1E}$$

Now in these equations $\frac{DE}{CE} = \frac{D_1E}{C_1E}$; therefore $\frac{FD}{HC} = \frac{F_1D_1}{H_1C_1}$; but $FD = F_1D_1$, which gives $HC = H_1C_1$, which proves that the point H has moved to H_1. Also $\frac{FE}{HE} = \frac{F_1E}{H_1E}$, from which it follows that FF_1 is

parallel to HH_1, and

$$\frac{FF_1}{HH_1} = \frac{FE}{HE} = \frac{DE}{CE}$$

or the motions are proportional to the distances of the points F and H from E.

If the point F is moved over any curved path, P and H will trace similar curves reduced in size in proportion to their distances from the fixed point E.

The pantograph is used to reduce or enlarge drawings and maps and for a variety of purposes where it is desired to reproduce the motion of a given point at a different scale.

Linkages consisting of combinations of pantographs and straight-line mechanisms are sometimes used.

6-26. Parallel Motion by Means of Four-Bar Linkage. The parallel crank mechanism, § 6-10, Fig. 6–8, is very often used to produce parallel motions. The common parallel ruler, consisting of two parallel straight-

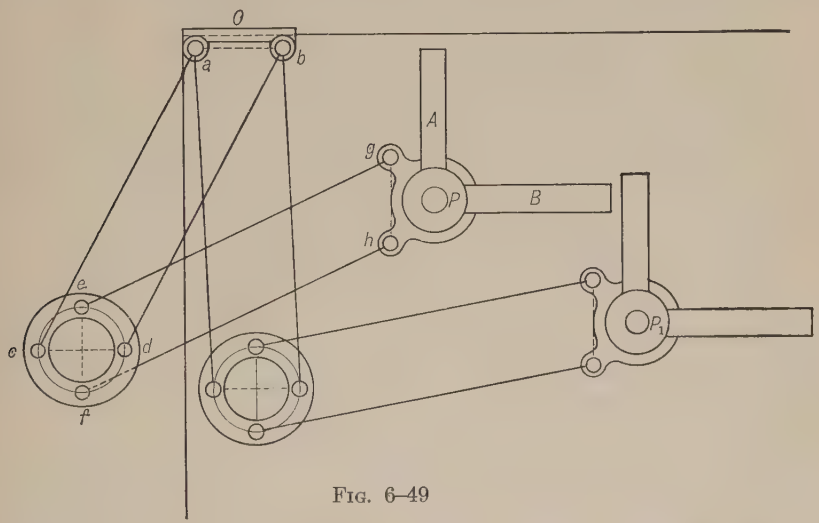

FIG. 6–49

edges connected by two equal and parallel links is a familiar example of such application. A double parallel crank mechanism is applied in the Universal drafting machine, extensively used in place of T square and triangles. Its essential features are shown in Fig. 6–49. The clamp C is made fast to the upper left-hand edge of the drawing board and supports the first linkage *abcd*. The ring *cedf* carries the second linkage *efhg*, guiding the head P. The two combined scales and

straight-edges A and B, fixed at right angles to each other, are arranged to swivel on P, and by means of a graduated circle and clamp nut may be set at any desired angle, the device thus serving as a protractor. The linkage is also shown when the head is moved to P_1, and it is easily seen that the straight-edges will always be guided into parallel positions.

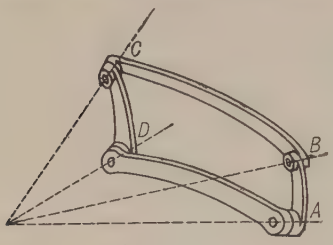

FIG. 6–50

6–27. The Conic Four-Bar Linkage. If the axes of the four cylindric pairs of the four-bar linkage are not parallel, but have a common point of intersection at a finite distance, the chain remains movable and also closed (Fig. 6–50). The lengths of the different links will now be measured on the surface of a sphere whose center is at the point of intersection of the axes. The centrodes will no longer be cylinders, but cones, as all the instantaneous axes must pass through the common point of intersection of the pin axes.

The different forms of the cylindric linkage repeat themselves in the conical one, but with certain differences in their relations. The principal difference is in the relative lengths of the links, which would vary if they were measured upon spherical surfaces of different radii, the links being necessarily located at different distances from the center of the sphere in order that they may pass each other in their motions. The ratio, however, between the length of a link and its radius remains constant for all values of the radius, and these ratios are merely the values of the circular measures of the angles subtended by the links. In place of the link lengths, the relative magnitudes of these angles are to be considered.

The alterations in the lengths of the links are represented by corresponding angular changes. The infinitely long link corresponds to an angle of 90°, as this gives motion on a great circle which corresponds to straight-line motion in the cylindric linkages.

6–28. Hooke's Joint. The most common application of the conic four-bar linkage is that of the special case in which three of the links subtend angles of 90° and the fourth link an angle of more than 90°. Fig. 6–51 shows two views of the elementary linkage, so arranged. The shafts T and S are turning in fixed bearings, and a complete revolution of either one will cause the other to make a complete revolution in the same time, but with a varying angular speed ratio during the time.

Fig. 6–52 shows a skeleton model of the same mechanism. Here, as in practise, two cranks are used on shafts S and T for additional strength and better balance. The pins are fast to the sphere, which

therefore forms the connecting rod of the linkage as suggested by the dotted line. A rectangular cross may replace the sphere, as shown in Fig. 6–53, which is a drawing of a small joint made by the Boston Gear Works.

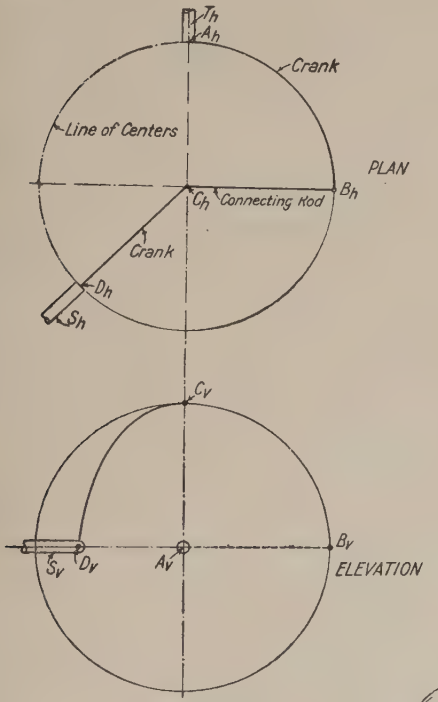

Fig. 6–51

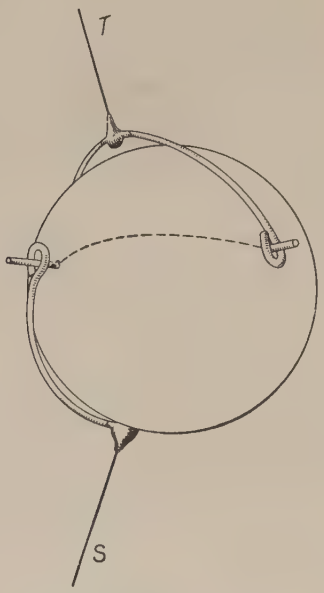

Fig. 6–52

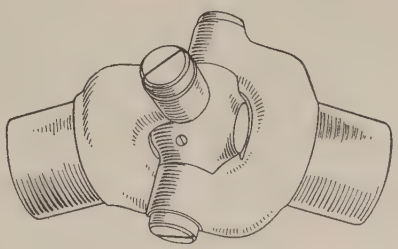

Fig. 6–53

Several other forms of construction are used, most of which give the exact equivalent, kinematically, of the linkage in Fig. 6–51, although some are only approximate.

6–29. Relative Angular Motion of Two Shafts Connected by a Single Hooke's Joint. If shaft T, Fig. 6–51, turns through a known angle θ, the angle ϕ through which S is caused to turn will depend upon the angle between the axes of S and T and upon the position of the plane of the crank AB relative to the plane containing the axes of S and T. The angle ϕ may be found graphically or may be calculated.

Graphical Solution for ϕ. In Fig. 6–54, let O be the center of the sphere and let $\theta = 0°$ when the plane of crank AB coincides with the plane containing S and T. In the elevation, where θ appears in its true size, lay off angle $B_vO_vB_v' = \theta$. Since the radius OB is always parallel to the plane of projection (in the elevation) and since OC is perpendicular to OB it will always be projected as a perpendicular to OB. The actual path of C is a great circle, which in the elevation appears as an ellipse of which C_vD_v is one quadrant. Therefore draw O_vC_v' perpendicular to O_vB_v' meeting the ellipse at C_v'. The links BC and CD now appear as the elliptic arcs $B_v'C_v'$ and $C_v'K_vD_v$ respectively. The angle $C_vO_vC_v'$ is equal to θ and is the projection of ϕ. To find the true size of this angle revolve the line O_vC_v' parallel to the plane of projection, getting $C_vO_vW_v = \phi$.

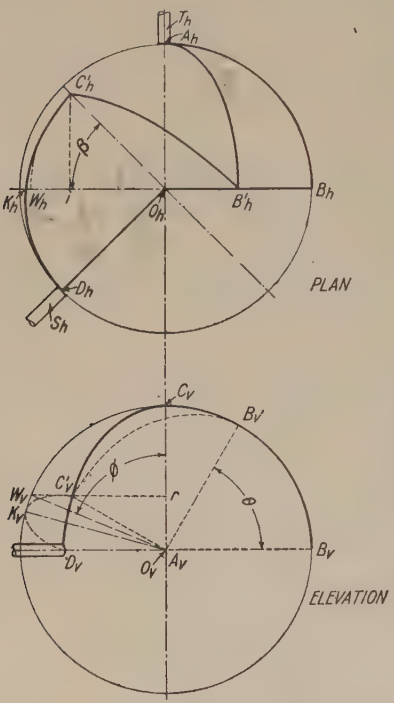

Fig. 6–54

Equation for ϕ. In Fig. 6–54 let β be the acute angle between the axes of S and T. Angle $C_v'O_vC_v = \theta$. (See above discussion of Fig. 6–54.)

Draw $W_vC_v'r$. Then

$$\tan \phi = \frac{W_v r}{O_v r} \quad \text{and} \quad \tan \theta = \frac{C_v' r}{O_v r}$$

Therefore

$$\frac{\tan \phi}{\tan \theta} = \frac{W_v r}{C_v' r}$$

But (see plan)

$$\cos \beta = \frac{O_h i}{O_h C_h'} = \frac{O_h i}{O_h W_h} = \frac{C_v' r}{W_v r}$$

Therefore

$$\frac{\tan \phi}{\tan \theta} = \frac{1}{\cos \beta} \quad \text{or} \quad \tan \phi = \frac{\tan \theta}{\cos \beta} \tag{19}$$

It should be noticed that if the initial position of the crank AB is chosen so that $\theta = 0°$ when the plane of AB is perpendicular to the plane of S and T then equation (19) would have to be modified.

6–30. Angular Speed Ratio of Two Shafts Connected by a Single Hooke's Joint. To find the ratio of the angular speed of shaft S to that of T, equation (19) may be differentiated, remembering that $\cos \beta$ is a constant.

Then $$\frac{d\phi}{d\theta} = \frac{\sec^2 \theta}{\sec^2 \phi \cos \beta} = \frac{1 + \tan^2 \theta}{\cos \beta(1 + \tan^2 \phi)}$$

Substituting for $\tan \phi$ its value obtained from equation (19) gives

$$\frac{d\phi}{d\theta} = \frac{\cos \beta}{1 - \cos^2 \theta \sin^2 \beta} \tag{20}$$

The minimum value of $\frac{d\phi}{d\theta}$ will occur when $\cos \theta = 0$, or $\theta = 90°$ and $270°$, when the value $\frac{d\phi}{d\theta} = \cos \beta$. The maximum value will occur when $\cos \theta = 1$ or $\theta = 0°$ and $180°$, when the value $\frac{d\phi}{d\theta} = \frac{1}{\cos \beta}$.

Hence in one rotation of the driving shaft the angular speed ratio varies twice between the limits $\frac{1}{\cos \beta}$ and $\cos \beta$; and between these points there are four positions where the value is unity.

If the angle β increases, the variation in the angular speed ratio of the two connected shafts also increases; and when this variation becomes too great to be admissible, other arrangements must be employed.

The Maximum and Minimum Values of $\theta - \phi$, that is, the greatest difference in the angular displacement of the two shafts, will occur when $\frac{d\phi}{d\theta} = 1$. Using the equation $\frac{d\phi}{d\theta} = \frac{1 + \tan^2 \theta}{\cos \beta(1 + \tan^2 \phi)}$ and letting $\frac{d\phi}{d\theta} = 1$ gives $1 + \tan^2 \theta = \cos \beta(1 + \tan^2 \phi)$, and substituting the value $\tan \phi$ from equation (19) gives

$$1 + \tan^2 \theta = \cos \beta \left(1 + \frac{\tan^2 \theta}{\cos^2 \beta}\right) \quad \text{or} \quad \tan \theta = \mp \sqrt{\cos \beta} \tag{21}$$

There will be four values of θ at which the difference between θ and ϕ is a maximum. For two of these ϕ will be greater than θ and for the other two ϕ will be less than θ. These four values of θ are also the ones at which the angular speed ratio of the two connected shafts is unity.

6–31. Angular Speed Ratio by Law of Four-Bar Linkages. The speed ratio of the cranks of the conic linkage may be found by a construction equivalent to that given for the cylindric linkage in § 6–5.

The construction will be briefly outlined here although the use of the equation previously derived is simpler.

1. *By the inverse ratio of the segments into which the connecting rod cuts the line of centers* (Fig. 6–55). Through the point m where the

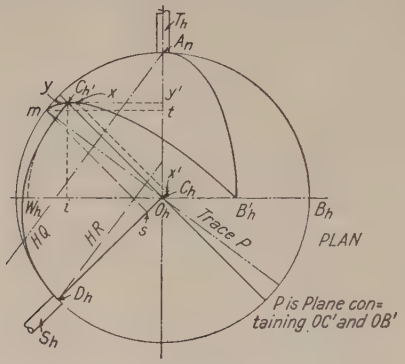

FIG. 6–55

connecting link $B_h'C_h'$ cuts the line of centers A_hD_h pass planes perpendicular to the axes of S and T. These planes will cut from the sphere, circles whose radii are ms and mt.

Then
$$\frac{\textit{Angular speed of } S}{\textit{Angular speed of } T} = \frac{mt}{ms} \tag{22}$$

The proof of equation (22) may be seen by assuming a velocity for B_h' and resolving it into components tangent and normal to the link $B_h'C_h'$. The tangential component will be the same for all points on $B_h'C_h'$ and on the ellipse of which it is a part, whether such point is on the link BC or on a solid attached at B or C. If this tangential component is transferred to m and the actual velocity of m is found, this velocity will be the same whether m is thought of as a point on crank D_hC_h' enlarged or on crank A_hB_h' enlarged; that is, the velocity of the common end of the radii mt and ms will be the same. Hence the speed of turning of these radii about their respective axes will be inversely as their length.

2. *By the inverse ratio of normals from the fixed centers to the connecting rod.* Fig. 6–55. Pass planes whose traces are HQ and HR through A and D perpendicular to the plane containing $B_h'C_h'$. The arc $B_h'C_h'$ pierces these planes at y and x respectively and

$$\frac{\textit{Angular speed of } S}{\textit{Angular speed of } T} = \frac{\textit{True length of radius projected as } yy'}{\textit{True length of radius projected as } xx'} \tag{23}$$

This construction is not as simple as that for 1.

6–32. Angular Acceleration of Driven Shaft. Let ω_T be the constant angular speed of the driving shaft, Fig. 6–54, ω_S the angular speed of the driven shaft S, α_S the angular acceleration of S. Then, in equation (20)

$$\theta = \omega_T t \quad \text{and} \quad d\theta = \omega_T \, dt$$

Therefore equation (20) may be written

$$\frac{\dfrac{d\phi}{dt}}{\omega_T \dfrac{dt}{dt}} = \frac{\cos \beta}{1 - \cos^2 \omega_T t \sin^2 \beta}$$

Hence

$$\omega_S = \frac{\omega_T \cos \beta}{1 - \cos^2 \omega_T t \sin^2 \beta} \tag{24}$$

Differentiating equation (24) gives

$$\alpha_S = \frac{d\omega_S}{dt} = \frac{-2 \, \omega_T^2 \sin^2 \beta \cos \beta \sin \theta \cos \theta}{(1 - \cos^2 \theta \sin^2 \beta)^2} \tag{25}$$

To find the value of θ when α_S is a maximum or minimum, equation (25) is differentiated, the result made equal to zero, and the equation solved for cos θ. Disregarding imaginary roots this gives for maximum or minimum values of α_S

$$\cos \theta = \mp \sqrt{\frac{(3 \sin^2 \beta - 2) + \sqrt{(3 \sin^2 \beta - 2)^2 + 8 \sin^2 \beta}}{4 \sin^2 \beta}} \tag{26}$$

Therefore θ will have four values, two of which represent the position of the linkage when α_S is maximum and the other two the position when α_S is minimum. The maximum occurs when θ is between 90° and 180° and again between 270° and 360°.

6–33. Double Hooke's Joint. *Two parallel or intersecting shafts may be connected by a double Hooke's joint and have uniform motions, provided that the intermediate shaft makes equal angles with the connected shafts, and that the links on the intermediate shaft are in the same plane.* Fig. 6–56 gives a plan of two parallel shafts so connected, and the position after T has turned through an angle θ. It is evident from an inspection of the figure that one joint exactly neutralizes the effect of the other.

The fact that the angular speeds are equal will appear from the following: From equation (19)

$$\tan \phi = \frac{\tan \theta}{\cos \beta} \tag{I}$$

and $$\tan \phi = \frac{\tan \gamma}{\cos \beta} \quad \text{or} \quad \tan \gamma = \tan \phi \cos \beta \tag{II}$$

Differentiating (I) gives

$$\frac{d\phi}{d\theta} = \frac{\sec^2 \theta}{\sec^2 \phi \cos \beta} \tag{III}$$

Differentiating (II) gives

$$\frac{d\gamma}{d\phi} = \frac{\sec^2 \phi \cos \beta}{\sec^2 \gamma} \tag{IV}$$

Multiplying (III) by (IV) gives

$$\frac{d\gamma}{d\theta} = \frac{\sec^2 \theta}{\sec^2 \gamma} = \frac{1 + \tan^2 \theta}{1 + \tan^2 \gamma}$$

Putting in values of $\tan \theta$ from (I) and $\tan \gamma$ from (II) gives

$$\frac{d\gamma}{d\theta} = \frac{1 + \cos^2 \beta \tan^2 \phi}{1 + \cos^2 \beta \tan^2 \phi} = 1$$

The term universal joint is often used to designate the above-described mechanism.

Fig. 6–57 shows a universal joint used on a milling machine. The upper end is connected to the feed shaft and the lower end to the driving shaft. When the work is raised and lowered or moved to the right or left the connecting shaft must change its length. This is made possible by having the connecting shaft in two pieces, one of which telescopes into the other, with a key and keyway. Since the connected shafts are always parallel they make equal angles with the connecting shaft for all positions. The forks on the two ends of the connecting shaft lie in the same plane. Hence the two requirements for constant speed ratio between the connected shafts are fulfilled.

6–34. Universal Joint Connecting Two Non-Parallel, Non-Intersecting Shafts. Two shafts which are neither parallel nor intersecting may be connected by a double Hooke's joint and have uniform angular speed ratio provided the connecting shaft makes equal angles with the connected or main shafts, and the cranks on the connecting shaft are so arranged that they lie simultaneously in the planes determined by the main shafts and the connecting shaft.

Two shafts are located as in Fig. 6–58 where ρ is the projected angle between the two main shafts, h the length of their common perpendicular. Let l be the length of the connecting shaft between its points of intersection with the main shafts, d the distance along the axis of each

main shaft to the point of intersection of its axis with the connecting shaft, β the angle which the connecting shaft makes with each main shaft, and ψ the angle between the planes of the cranks on the connecting shaft.

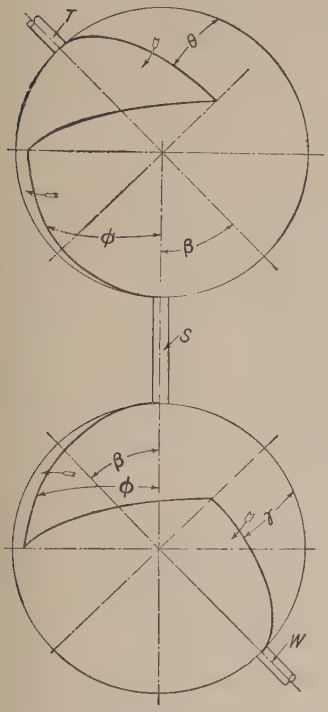

Fig. 6–56

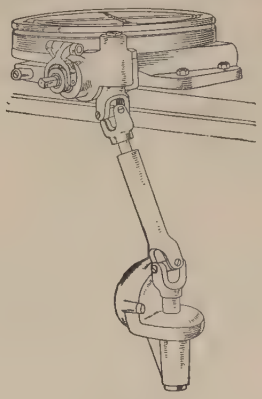

Fig. 6–57

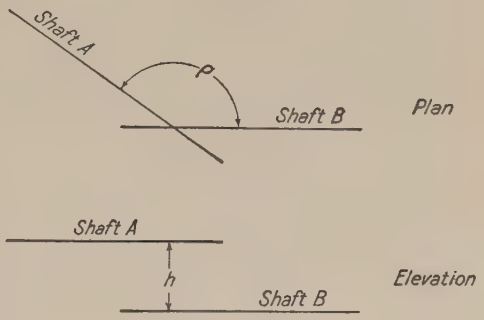

Fig. 6–58

Given ρ, h, and l; to find ψ, d, and β.

A full discussion of this problem would occupy too much space to be given here. It may be solved graphically or by calculation. The following equations, given here without demonstration, express the relations which exist.

$$\cos \beta = \frac{(\sqrt{l^2 - h^2}) \sin \frac{\rho}{2}}{l} \tag{27}$$

$$d = \frac{\sqrt{l^2 - h^2}}{2 \sin \frac{\rho}{2}} \tag{28}$$

$$\tan \frac{\psi}{2} = \frac{h}{l} \tan \frac{\rho}{2} \tag{29}$$

PROBLEMS

VI–1. A and D are fixed axes. $AD = 2\frac{1}{2}$ in.; $AB = 1\frac{1}{4}$ in.; $DC = 1\frac{3}{4}$ in.; $BC = 2\frac{1}{8}$ in. Angle $BAD = 60°$.

1. Name the links of this four-bar linkage.

2. Move the link AB through an angle of 30° each side of its present position and find the corresponding positions of BC and DC.

3. If the angular speed of AB is 1 radian per minute, find the angular speed of DC and BC in the position shown.

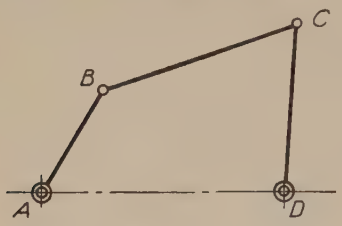

PROB. VI–1

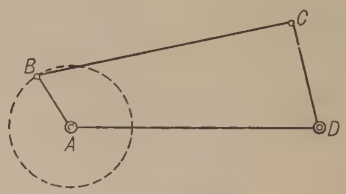

PROB. VI–2

VI–2. AD (fixed) = 10 in.; $BC = 10\frac{1}{2}$ in.; $DC = 4\frac{1}{2}$ in. The sketch shows a linkage used in the feed mechanism of a vertical boring mill. The crank AB is adjustable for varying throws. Determine the angle through which DC oscillates when AB is $2\frac{1}{2}$ in. (this being the setting for maximum feed).

VI–3. In this drag link mechanism A and D are fixed axes. $AD = 2$ in.; $AB = BC = DC = 3$ in. Angle $BAD = 63\frac{1}{2}°$. AB is the driving crank and turns at constant speed left handed. Starting with the position shown, find the angular displacement of DC for each 30° position of AB for a complete revolution.

Plot a curve whose ordinates represent angular displacements of DC at scale 1 in. = 50°. The abscissas represent angular displacements of AB at the same scale as the ordinates. The positions shown in the figure are the positions of zero displacement. If the shaft D drives a cutting tool which is at the beginning of a stroke in the given position, find the ratio of time of cutting stroke to time of return stroke. Which is the cutting stroke?

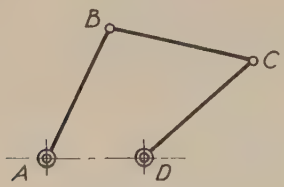

PROB. VI–3

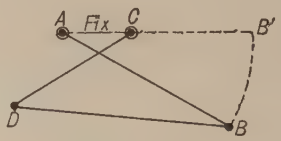

PROB. VI–4

VI–4. Plot a curve showing ratio $\frac{\text{Angular speed } CD}{\text{Angular speed } AB}$ for 30° intervals of AB, starting with AB in position AB_1 and turning uniformly left handed.

Ordinates = angular speed ratio (1 in. = unity).

Abscissas = angular positions of AB ($\frac{1}{4}$ in. = 30°).

$AC = \frac{3}{4}$ in.; $DC = 1\frac{1}{2}$ in.; $DB = 2\frac{1}{4}$ in.; $AB = 2$ in.

VI–5. In this linkage let $BC = AB = CD = 1\frac{1}{2}$ in.; and $AD = 2\frac{3}{4}$ in. Find the centrode of BC between the positions B_1C_1 and B_2C_2, and then find the centrode of AD if BC is fixed.

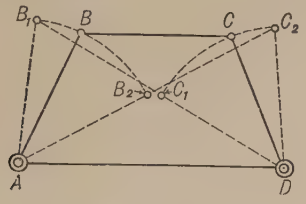

PROB. VI–5

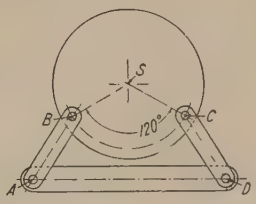

PROB. VI–6

VI–6. The cranks AB and DC turn about the fixed axes A and D. The crank pins B and C are attached to the disk whose center is S. In the position shown S is on a perpendicular to AD at its mid point and AB and DC make equal angles with AD. $AD = 5\frac{1}{4}$ in.; $AB = DC = 2$ in.; $SC = SB = 1\frac{3}{4}$ in.; angle $CSB = 120°$. Find that point on the disk which, at the instant, has zero velocity. What name is given to that point?

VI–7. $AC = BD = 8$ in.; $AB = CD = 3$ in. If AB is turning uniformly 25 rpm, calculate the maximum angular speed of CD in radians per minute. Sketch the linkage in the position at which the maximum angular speed of CD exists.

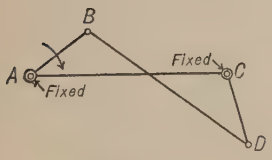

PROB. VI–7

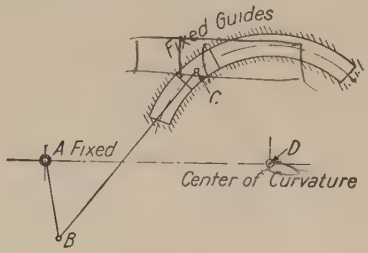

PROB. VI–8

VI–8. $AB = 1\frac{1}{4}$ in.; $AD = 3\frac{1}{2}$ in.; $DC = 1\frac{7}{8}$ in.; $BC = 3\frac{3}{8}$ in.; angle $DAB = 80°$. Show and name the links of this four-bar linkage, and find the angular speed ratio of the cranks in this position.

VI–9. A gas engine has a stroke of 5 in. and a connecting rod 10 in. long. Calculate, and check by graphical construction, the speed at which the piston is moving when it is at mid stroke, if the engine is turning 1100 rpm. Calculate the acceleration of the piston when the crank is at a dead point.

VI–10. $AB = 1\frac{1}{4}$ in.; $AP = 3\frac{1}{4}$ in.; $AH = 4\frac{3}{8}$ in.; angle $PAH = 60°$; angle $BAP = 60°$. Which of the slides, P or H, has the greater linear speed in the position shown? Write an expression for the ratio $\frac{\text{Linear speed } H}{\text{Linear speed } P}$. Find numerical value of this ratio.

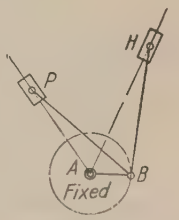

PROB. VI–10

VI–11. $AB = 3$ in.; $AT = 9$ in.; angle $TAB = 60°$. In this engine with cylinder on trunnions at T indicate the members of the four-bar linkage. Give an expression for the ratio $\frac{\text{Angular speed of shaft } A}{\text{Angular speed of cylinder about } T}$ with numerical answer.

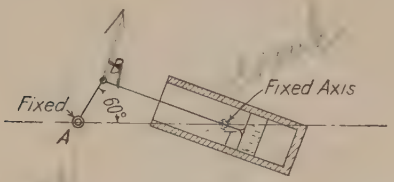

Prob. VI–11

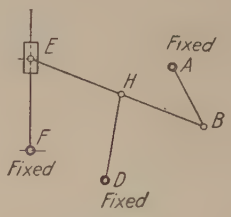

Prob. VI–12

VI–12. $FD = 2\frac{1}{2}$ in.; $FA = 5$ in.; $DH = 2\frac{3}{4}$ in.; $AB = 2$ in.; $BH = 2\frac{3}{4}$ in.; $HE = 3$ in.; $AD = 4$ in.; angle $DAB = 60°$. Indicate two four-bar linkages found in this figure. In each case state which is the fixed link, which the connecting rod, and which the cranks. (Draw in the infinite links where needed.) Identify the body which contains each of the lines that represents a link. (See § 6–3; also Fig. 6–25.)

VI–13. A swinging block quick-return motion has a ratio $\frac{\text{Time of cutting stroke}}{\text{Time of return stroke}} = \frac{2}{1}$.

If the driving crank is 1 in. long, locate the fixed point of the swinging link. Draw the linkage in some convenient position, draw the infinite links which have been replaced by the sliding pair, state the ratio $\frac{\text{Angular speed driven crank}}{\text{Angular speed driving crank}}$ for this position (numerical values not required). State maximum (numerical) value of this ratio.

VI–14. In the swinging block mechanism, Fig. 6–25, let the maximum value of $BA = 8$ in. and the minimum value $= 3$ in.; path of S is perpendicular to CB and 11 in. above B; maximum value of $\frac{\text{Time of cutting stroke}}{\text{Time of return stroke}} = \frac{2}{1}$; angular speed of $BA = 30$ rpm right handed. Scale of space diagram 3 in. $= 1$ ft.

1. Find position of axis C.
2. Find minimum value of $\frac{\text{Time of cutting stroke}}{\text{Time of return stroke}}$.
3. With $BA = 8$ in., plot a curve whose abscissas are time units and whose ordinates are angular speeds of h in revolutions per minute. Scale of abscissas $\frac{1}{4}$ in. $=$ time occupied by BA in turning through an angle of 15°. Scale of ordinates 1 in. $= 10$ rpm. Use as zero position of the mechanism that position where A is on BC between B and C. Solve for one-half revolution of BC, using semi-graphical method explained in § 6–19.
4. Find the velocity and acceleration of S when angle $CBA = 120°$.

VI–15. In a Whitworth quick-return mechanism similar to Fig. 6–30, $BA = 5\frac{1}{2}$ in.; $BC = 12\frac{1}{4}$ in. R is on a perpendicular to AB passing through A. Draw space diagram one-eighth size.

1. Find the ratio of time of cutting stroke to time of return stroke.
2. Let $AN = 15$ in.; $NR = 4$ ft; angular speed of $BC = 1$ radian per unit of time. Find the linear speed of R in feet per unit of time when AN is perpendicular to the path of R.

3. If the path of R is 20 in. above A, other dimensions remaining the same as before, what difference results in ratio of time of cutting stroke to time of return stroke?

VI–16. The cylinder h is 8 in. in diameter and turns in the fixed bearings k. The axis of h is at C. The block g slides in a slot 4 in. wide cut across h as shown. An eccentric f, 3 in. in diameter, with center at A, is contained in a hole in g and turns about the fixed axis B. $BC = BA = 1$ in. Angle CBA is 120°. The angular speed of f is 2 radians per second, left handed.

1. Show and name the links of the equivalent four-bar linkage.
2. Find the angular speed of h for the position shown. Is this constant or variable? Give reason for your answer.
3. Find by velocity vectors the speed with which g is sliding on h.

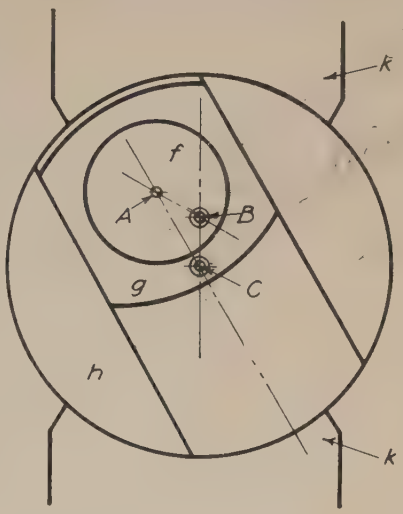

Prob. VI–16

VI–17. $CE = 2$ in.; $CR = 1$ in.; $EP = \frac{1}{2}$ in. Describe exactly the paths of P and R, giving dimensions, as the blocks slide in the fixed guides.

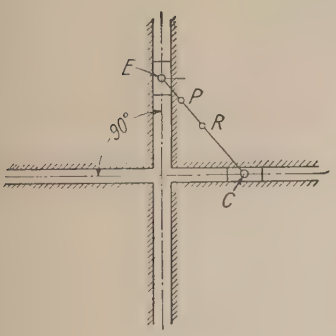

Prob. VI–17

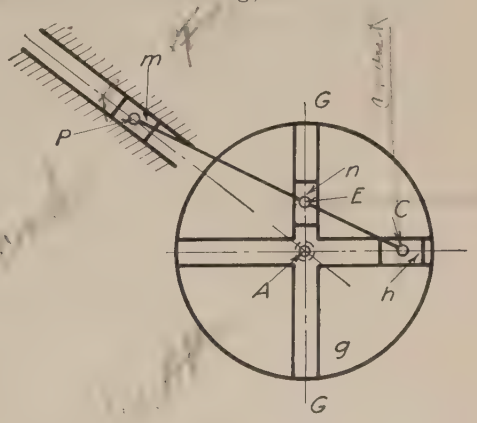

Prob. VI–18

VI–18. The slotted disk g turns at uniform angular speed about the fixed axis A. The blocks n and h slide in the slots in g. The block m slides in a fixed slot. A straight rigid rod is pinned to the blocks at C, E, and P. $CE = 3\frac{1}{4}$ in.; $CP = 12\frac{1}{4}$ in.

1. Show a four-bar linkage involving the axis A and the pin P.
2. How many strokes does P make for a complete revolution of the disk g?
3. Find the length of the stroke of P.

VI–19. Design a Scott-Russell straight-line mechanism to guide a point P approximately along the line YY a distance of 3 in. either side of line XX, P to be on YY at its two extreme positions and its mid position. Guiding crank to be pivoted at A and to swing 30° above and below XX. Assume for this construction that one end C of the guided link is always on line XX.

If C is guided by a crank 6 in. long, about an axis D, perpendicularly below a point halfway between the extreme positions of C, locate a point S which, by means of a pantograph having PC and DC as two sides, shall move in a vertical line 2 in. long.

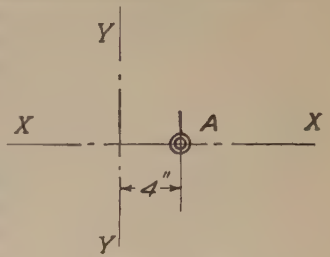

PROB. VI–19

VI–20. Draw a pantograph to connect two points A and B, 1½ in. apart, so that the motion of A shall be to the motion of B as 13 is to 7. Calculate the distance from B to the fixed point. The pantograph is to be so arranged that A may move at least 5 in. in either direction along the line through A and B.

VI–21. Design a pantograph to reduce the motion of the crosshead of an engine that has a stroke of 12 in., to 3 in., so that a steam engine indicator may be operated from it. Let the distance from the fixed point to the point of connection at the crosshead be 15 in. Draw half size.

VI–22. The three points A, B, and C are to be connected by a pantograph so that A may move up 4 in., B up 3 in., and C down 2 in. $AC = 6$ in. Locate the fixed point and the point B, and then draw a pantograph that will allow A to be moved 4 in. in every direction.

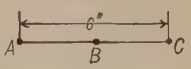

PROB. VI–22

VI–23. The point P is to be guided approximately on the straight line YY by a Watt straight-line mechanism. P is to move 1½ in. above and below the position shown and is to be exactly on the line YY in its extreme positions and in its mid position.

Determine the lengths of the cranks DC and AB, and draw the connecting rod.

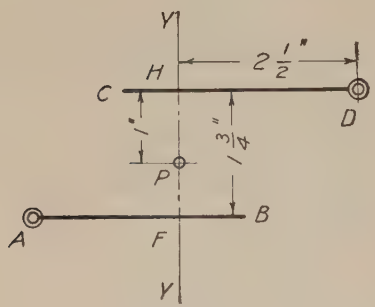

PROB. VI–23

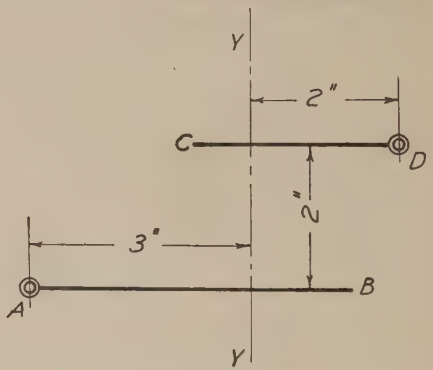

PROB. VI–24

VI–24. A point P is to be guided by a Watt straight-line mechanism so that it shall have a stroke of 2 in. approximately along the line YY. P is to be on YY when at the ends and in the middle of its stroke. The fixed axes are located as shown.

Find the lengths of the cranks and connecting rod, and locate P on the connecting rod.

Draw the linkage in mid position as shown in the diagram and also when P is at the upper end of its stroke.

VI–25. In the Hooke's joint shown, the axes of the shafts T and S and the crank f lie in the plane of the paper. Angle $\beta = 30°$. Shaft T turns with constant angular speed. Let θ be the angle turned through by T in a given time and ϕ the corresponding angle turned through by S.

PROB. VI–25

1. Compute one value of the angle θ when $\phi - \theta$ is a maximum.
2. For the value of θ found in 1, find graphically the value of ϕ. Check by computation.
3. For the same value of θ compute the angular speed of S if the angular speed of T is 1 radian per second.

CHAPTER VII

TRANSMISSION OF MOTION BY DIRECT CONTACT

7–1. Nature of Contact. When the driving member of a mechanism is in direct contact with the driven piece (see § 1–9), the bodies constituting the driver and follower (driven member) are either in pure rolling contact (see § 4–13) or there must be sliding between the surfaces in contact. An exception to this occurs when the points or lines of contact on both bodies are moving along the common normal to the contact surfaces.

In this chapter certain fundamental principles and constructions concerning these two kinds of relative motion will be discussed. In the chapters which follow, the application of these principles will be considered in connection with friction drives, gears, cams, and screws.

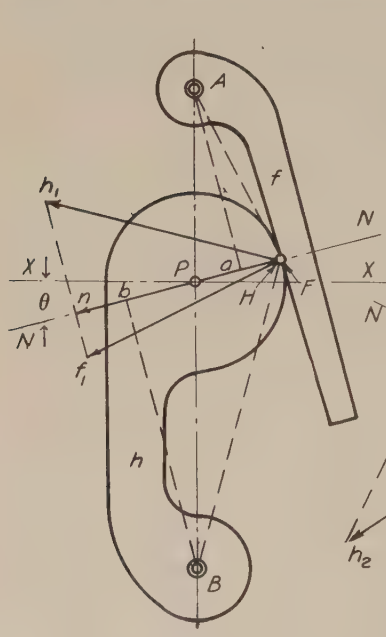

FIG. 7–1

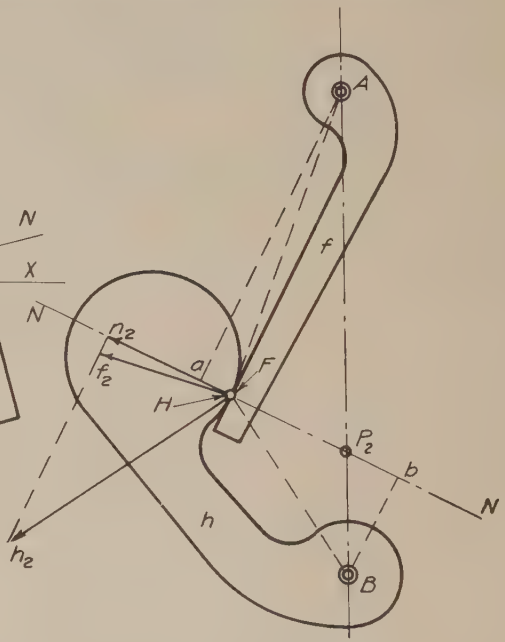

FIG. 7–2

7–2. Sliding Contact. Angular Speed Ratio. The first and one of the most important cases to be studied is that in which the driver and follower are turning about axes which are fixed in position relative to

each other. In Fig. 7–1 the pieces f and h are turning about the fixed axes A and B respectively. The point F on f is at the instant in contact with the point H on h, and f is assumed to be the driver and turning right handed. Let ω_f be the angular speed of f and ω_h the angular speed of h. Then the velocity of F is equal to $\omega_f \cdot AF$ and is represented by the vector Ff_1 perpendicular to AF.

NN is the common normal to the two contact surfaces. The total component of Ff_1 along NN is Fn, and H must have the same total component. (See § 4–18.) The direction of the velocity of H is perpendicular to BH. Therefore Hh_1 represents the velocity of H. Then

$$\omega_h = \frac{Hh_1}{BH}$$

The magnitude of the velocity of sliding of F on H (that is, the relative velocity of F and H) is shown by the length of the line h_1f_1. F is moving downward relative to H with velocity h_1f_1, or H is moving upward relative to F with velocity f_1h_1.

Let P be the point where the common normal NN cuts the line of centers AB. Then

$$\frac{\omega_h}{\omega_f} = \frac{AP}{BP}$$

Proof. Draw Aa and Bb perpendicular to NN. Then triangles Hnh_1 and BbH are similar, and triangles Fnf_1 and AaF are similar. Hence

$$\frac{Hh_1}{BH} = \frac{Hn}{Bb} \tag{I}$$

and

$$\frac{Ff_1}{AF} = \frac{Fn}{Aa} \tag{II}$$

Dividing (I) by (II) gives

$$\frac{Hh_1}{BH} \div \frac{Ff_1}{AF} = \frac{Hn}{Bb} \div \frac{Fn}{Aa} = \frac{Aa}{Bb}$$

since Fn and Hn are the same length. But

$$\frac{Hh_1}{BH} = \omega_h \quad \text{and} \quad \frac{Ff_1}{AF} = \omega_f$$

Therefore

$$\frac{\omega_h}{\omega_f} = \frac{Aa}{Bb} \tag{1}$$

Since the triangles AaP and BbP are similar, $\frac{Aa}{Bb} = \frac{AP}{BP}$. Hence

$$\frac{\omega_h}{\omega_f} = \frac{AP}{BP} \tag{2}$$

This relation between the angular speeds is extremely important. Stated in words it is as follows:

When one piece drives another by direct sliding contact the angular speeds of the two pieces are in the inverse ratio of the segments into which the common normal to the two contacting surfaces cuts the line of centers.

This law may also be shown to be true by considering the mechanism as a four-bar linkage with AB as the line of centers, f and h as the cranks, and NN as the coupler. Then, as was shown in § 4–9, the angular speeds of the cranks are in the inverse ratio of the segments into which the coupler cuts the line of centers.

In Fig. 7–2 the same mechanism is drawn in another position. The velocity vectors are drawn at about three-eighths the scale of Fig. 7–1 in order to bring their termini within the limits of the drawing. The demonstration given for the angular speed ratio in the first position applies equally well in the new position.

By measuring the drawings it will be found that in Fig. 7–1, $\frac{AP}{BP}$ is about $\frac{2}{3}$; hence from equation (2) $\frac{\omega_h}{\omega_f} = \frac{2}{3}$. In Fig. 7–2, $\frac{AP}{BP}$ is about $\frac{3}{1}$; hence $\frac{\omega_h}{\omega_f} = \frac{3}{1}$.

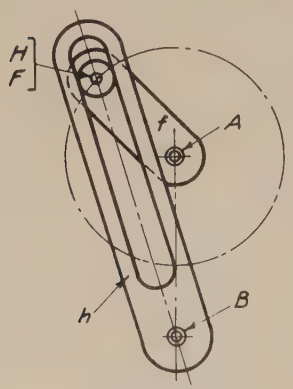

FIG. 7–3

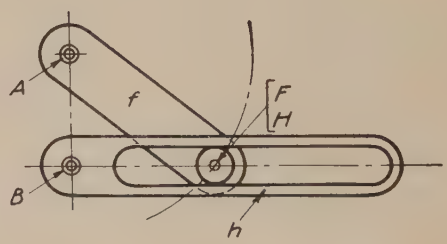

FIG. 7–4

It is apparent that the mechanism shown in Fig. 7–1 can act only through a limited range of angular motion, and also that the driver and

follower turn in opposite senses. In Fig. 7–3, which is lettered to correspond with Fig. 7–1, the driver f may make a complete revolution and in doing so will cause the follower h to oscillate through an angle whose magnitude depends upon the ratio of the line of centers AB to the crank length AF.

In Fig. 7–4 is a similar mechanism with the ratio of AB to BC such that both driver and follower turn in the same sense.

These are, kinematically, the same mechanisms as those discussed in connection with Figs. 6–25 and 6–30 respectively. In each of those cases a block is carried by the pin on the driving crank in order to give surface contact with the sides of the slot instead of line contact as in Figs. 7–3 and 7–4. This block does not in any way affect the relative motion of driver and follower.

7–3. Sliding Contact. Conditions for Constant Angular Speed Ratio. In the preceding article it was shown that the angular speeds of follower and driver are inversely as the distances from the fixed axes to the point P where the common normal to the surfaces which are in contact cuts the line of centers. Then if the shapes of these contacting surfaces are such that their common normal cuts the line of centers

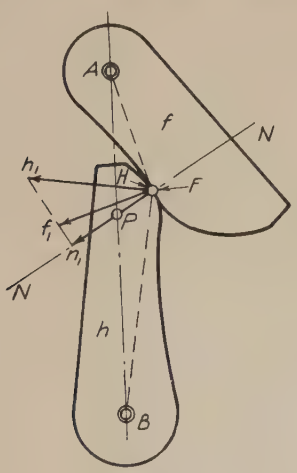

Fig. 7–5

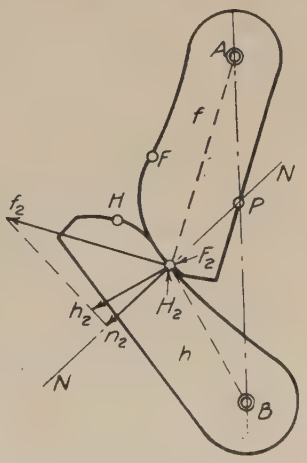

Fig. 7–6

always at the same point the angular speed ratio of the follower and driver will remain constant since P will now be a fixed point and the ratio $\frac{AP}{BP}$ will be constant. Figs. 7–5 and 7–6 show two pieces whose form is such as to fulfil this condition. Fig. 7–6 represents the same pieces as Fig. 7–5 in a different phase of action. It will be noticed that

P divides the line of centers into the same two segments in both cases and also that the velocity vectors are such as to give the same angular speed in both figures.

When the contacting surfaces of the driver and follower are so shaped that their common normal intersects the line of centers at the same point for all positions of the pieces throughout their period of action the curves which form the outline of these surfaces are said to be **conjugate curves.**

7–4. Pitch Point. Angles of Action. Pressure Angle. This article applies to both variable and constant angular speed ratio.

The point P where the common normal cuts the line of centers is called the **pitch point.**

The total angle through which the driver turns during the time it is in contact with the follower is the **angle of action of the driver,** and the angle turned through by the follower during the same time is the **angle of action of the follower.** With constant relative angular speeds, the magnitudes of the angles of action of the driver and follower are in the direct ratio of their angular speeds. In the case of variable angular speed ratio, such as in Fig. 7–1, the angles of action are directly proportional to the average angular speeds of the driver and follower.

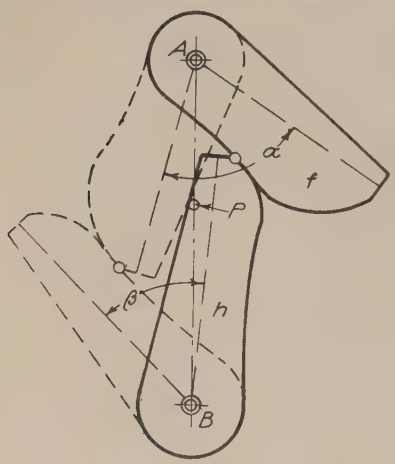

FIG. 7–7

In Fig. 7–7 the same mechanism as in Figs. 7–5 and 7–6 is shown in full lines where f is just beginning to drive h and in dotted lines where f and h are just on the point of swinging out of contact with each other. The angle α turned through by any line on f shows the magnitude of the angle of action of f, and the corresponding angle β shows the magnitude of the angle of action of h.

Referring to Fig. 7–1, if a line XX is drawn through P perpendicular to AB, the angle θ which NN makes with XX is equal to PAa and PBb since the sides are respectively perpendicular. The angle θ which the common normal to the contact surfaces makes with a perpendicular to the line of centers through the pitch point is called the **pressure angle** or **angle of obliquity.**

7–5. To Draw the Conjugate to a Given Curve. In Fig. 7–8, given the curve RS which is the outline of that part of the body f that is to drive body h by sliding contact. Let it be required to draw the curve.

WT of such form that $\frac{\omega_h}{\omega_f}$ shall be constant and of known value. The distance AB between the fixed axes is also known. As has already been shown, if the angular speed ratio remains constant the common normal to RS and WT must at all times cut the line of centers at a fixed point P. The first step then is to locate P. This is determined by the known value of $\frac{\omega_h}{\omega_f}$ from the equation $\frac{\omega_h}{\omega_f} = \frac{AP}{BP}$. Next choose any point C on the given curve RS and through C draw a normal to RS. If RS is a curve whose properties are known, such as an arc of a circle, ellipse, involute of a circle, etc., the normal may be drawn with precision; otherwise the direction of the normal must be estimated as carefully as possible.

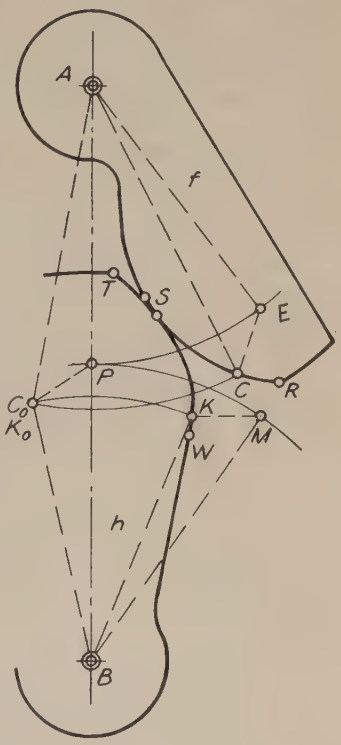

Fig. 7–8

In the figure, CE is the normal. Now rotate f about A until CE passes through P. To do this draw an arc about A through P cutting CE at E; then draw the arc CC_0 through C, and from P with a radius equal to CE cut this arc at C_0. C_0 is the point where C will be located when it is in contact with the desired curve. (Note that the triangle APC_0 is the triangle AEC turned about A until E coincides with P.) The point on the desired curve WT which will coincide with C at C_0 must be at the distance BC_0 from B. Hence draw the arc C_0K about B and lay off the angle C_0BK equal to angle $C_0AC \times \frac{\omega_h}{\omega_f}$. This may best be done by drawing an arc through P with B as a center and stepping off from P the length of arc PM equal to the length of arc PE. Then from M with a radius CE cut the arc C_0K at K. (Note that triangle BKM is the same as triangle BC_0P turned through an angle equal to $C_0AC \times \frac{\omega_h}{\omega_f}$.) The point K thus found is one point on the required curve. Choose other points on RS including R and S, and find the corresponding points on WT in the same manner. W is the

point corresponding to R, and T the point corresponding to S. A sufficient number of points having been found, a smooth curve drawn through them will be the required conjugate to RS.

7–6. Continuous Rotation with Constant Angular Speed Ratio. With a driver and follower having constant angular speed ratio through direct contact, as in Fig. 7–5, the range of motion is limited to a relatively small part of a revolution. The conditions in this respect are essentially the same as for the variable angular speed mechanism discussed in § 7–2. Though it may be possible to design the pieces with conjugate curves such that action through a complete revolution of at least one of the members is possible, the resulting action is of questionable practicability. When continuous action of this sort is desired a series of duplicate pieces are used on the same axis. For example, if, in Fig. 7–5, several pieces with acting surfaces like that of f are equally spaced around the shaft at A and a corresponding series of duplicates of h are equally spaced around the shaft at B, then when one pair of pieces has ceased to act the next pair will have come into contact. The number of pieces on the two shafts must be in the direct ratio of $\frac{AP}{BP}$, and they must be spaced close enough to allow one pair to come into action not later than the time when the preceding pair ceases to act. This is the basic principle underlying the design of gears and gear teeth; it will be more fully considered in a later chapter.

7–7. Rolling Contact. Attention has already been called to the fact that, when two bodies are in pure rolling contact, coincident points have identical velocities. In Fig. 7–1, where f is in contact with h on one side of the line of centers, F is sliding downward relative to the coincident point H. In Fig. 7–2 where the contact is on the opposite side of the line of centers from that in Fig. 7–1, the new point of contact F is sliding upward relative to H. That is, the sense of the relative velocity of the coincident points has changed. Now, in Fig. 7–9 the same mechanism as that in Fig. 7–1 is drawn in that phase of its action when the contact is on the line of centers. Here, it will be noticed, H and F have the same velocity, the component of sliding being zero. Hence at this instant f and h are in pure rolling contact.

In Fig. 7–6, F and H are the points which were in contact with each other in Fig. 7–5. It is apparent that the curve FF_2 contains all the points on f which have been in contact with points on h contained in the curve HH_2. The curve FF_2 is obviously much longer than HH_2. The same condition exists in Figs. 7–1 and 7–2, although the shapes in those figures happen to be such that the difference in the lengths of the two acting curves is not so great. If therefore the contact surfaces of driver

and follower are so shaped that they will at all times be in contact on the line of centers, rolling contact will result if no slipping occurs. The lengths of the acting curves in such a case would be the same. Hence the conditions for pure rolling contact between two bodies which are turning about parallel axes which are fixed relative to each other are: *The point of contact must always be on the line of centers, and the lengths of the contacting surfaces, as shown by their traces on a plane perpendicular to their axes, must be equal.*

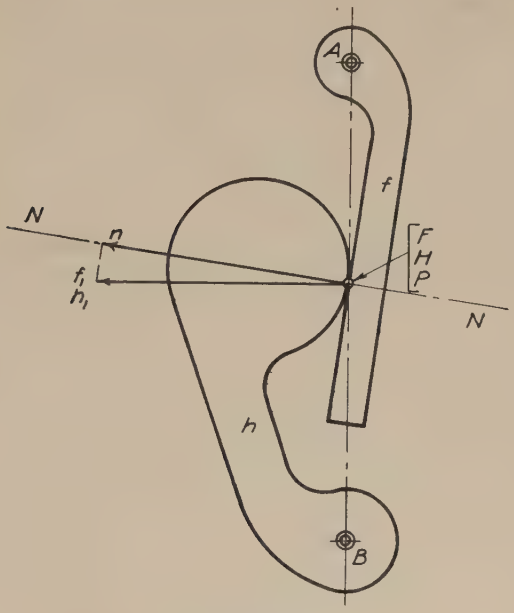

FIG. 7–9

If the point of contact is at all times in the same place on the line of centers the angular speed ratio remains constant. Circular cylinders are the only bodies which fulfil the requirements for pure rolling contact with constant angular speed ratio for parallel axes. Friction must be relied upon for transmission of motion.

For variable speed ratio an unlimited number of forms may be designed although relatively few are capable of permitting complete revolutions of both pieces.

7–8. To Draw a Curve to Act in Pure Rolling Contact with a Given Curve. Referring to Fig. 7–10, given the body f turning about the fixed axis A in sense indicated by the arrow. To find the outline of a body h, turning about the fixed axis B, which will roll without slip on the given outline F_0F_{10}. Also to find the angle through which h turns while f turns

through the angle α. The solution depends upon the two principles previously stated, namely: the point of contact must be on the line of centers and the lengths of the two curves which come in contact in a given time must be equal.

Divide the curve F_0F_{10} into parts so small that the length of the arc is approximately equal to the length of its chord. P_0 is one point common to both curves. With A as a center draw an arc through the first point

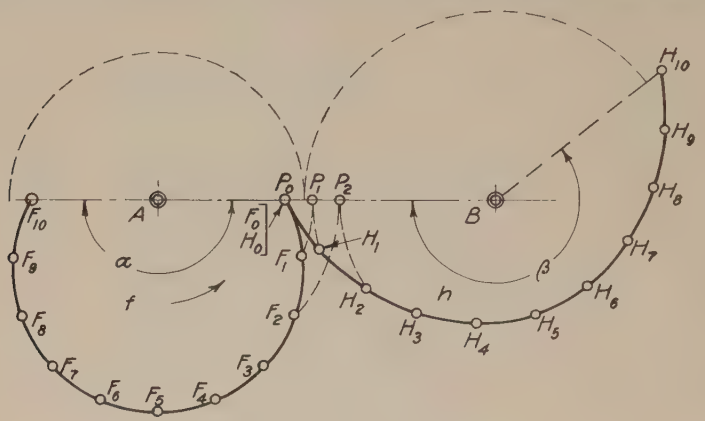

FIG. 7–10

of division, F_1. This arc cuts the line of centers at P_1. Through P_1 draw an arc, P_1H_1, with B as a center. From P_0 draw an arc with radius P_0F_1 cutting the arc P_1H_1 at H_1. Then H_1 is a point on the required curve.

Next, draw an arc about A through F_2 cutting the line of centers at P_2. Through P_2 draw the arc P_2H_2. From H_1 draw an arc with radius equal to the chord F_1F_2 cutting P_2H_2 at H_2. Then H_2 is a second point on the required curve. Repeat this process for each of the points F_3, F_4, etc., to F_{10}, giving H_3, H_4, etc., to H_{10}, which will be the last point on the required curve. Draw a smooth curve through the points found.

The angle β will be the angle turned through by h while f turns through the angle α.

Action between f and h ceases when H_{10} and F_{10} meet on the line of centers. If the outline of f were assumed for the remainder of its 360° motion and the corresponding curve found for h there would be no assurance that h would complete its 360° motion in the same time as f. Hence if the motion is to be continuous the given outline (in this case that of f) may not be chosen at random.

In the case shown, action for the completion of the cycle might be provided for by placing on the axes A and B, in another plane from f

and h, portions of two circular cylinders with radii inversely as the angles $360° - \alpha$ and $360° - \beta$ and the sum of whose radii is the distance AB. This type of problem will be treated in more detail in the next chapter.

7–9. Sense of Relative Motion. In all the cases illustrated in the preceding articles the common normal to the contacting surfaces cuts the line of centers between the fixed axes, thus causing the two bodies to rotate in opposite senses. If the pieces are so designed that the common normal cuts the line of centers on the same side of both axes the two bodies will turn in the same sense. Examples of this condition will be given later.

7–10. Other Cases. The foregoing discussion has been confined to the simplest cases, involving only coplanar motion about parallel axes, relatively fixed at a finite distance from each other. The principles brought out, however, are general in their nature and, with proper modifications, apply equally well when either of the bodies has rectilinear motion. In this case the distance between the axes is infinite.

Under certain conditions such as those involving the wedge or inclined plane both bodies may have rectilinear motion.

Another important series of mechanisms involving transmission of motion by direct contact arises when the two bodies do not have coplanar motion. Some of these will be considered in connection with rolling cones, hyperboloids, screws, and cylinder cams.

PROBLEMS

VII–1. Referring to Fig. 7–1 the distance AB is 5 in. The acting surface on f is a plane surface tangent to a circle of $\frac{1}{2}$-in. radius about A. The acting surface on h is a cylinder of $\frac{3}{4}$-in. radius the axis of which is 3 in. from B. This axis oscillates over a 45° arc; its extreme positions are 15° to the right of the center line AB and 30° to the left of AB.

Part 1. Find the angle through which f swings to cause h to swing through the angle described above.

Part 2. The cylinder h is driven from its extreme right-hand to its extreme left-hand position by the body f turning at uniform angular speed of 1 radian per second. Subdivide the angle through which f turns into six equal angles, and find ω_h for each of these positions including the two extreme positions.

Part 3. Find by vectors and tabulate the velocity of sliding of the point of contact F relative to the point of contact H for each of the positions specified in Part 2. State in connection with the tabulation in each case whether F is moving upward or downward relative to H.

VII–2. Find the pitch point in this mechanism when it is in position shown. Give numerical value of the ratio $\frac{\omega_h}{\omega_f}$. Indicate the sense of ω_h if ω_f is right handed. If $\omega_f = 1$ radian per second, find by vectors the velocity of sliding at the point of contact.

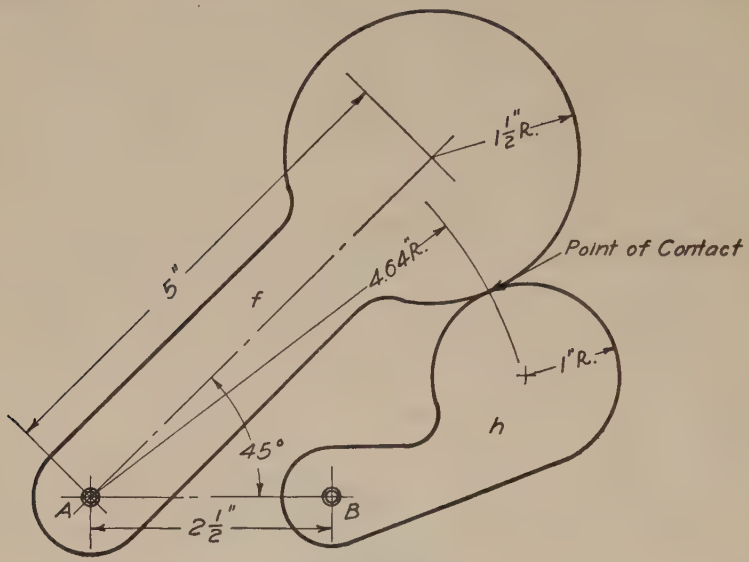

PROB. VII–2

VII–3. Part 1. The shafts A and B are driven at the same angular speed by a mechanism not shown in the figure; each shaft oscillates through an angle of 180°. Find the shape of a plate h to be located on B whose outline is conjugate to that of f. Use points 1, 2, 3, etc., in making the construction.

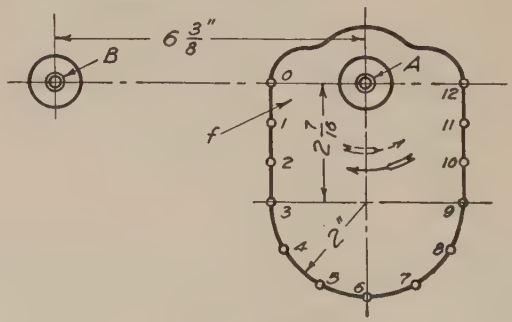

PROB. VII–3

Part 2. Let shaft A oscillate 180° in the direction of the full arrow and back to its present position in the direction of the dotted arrow. Find the shape of a plate h which is to be placed on shaft B and driven by plate f with pure rolling contact.

State the magnitude of the angle through which B oscillates.

VII–4. Part 1. If shafts A and B are driven by a mechanism (not shown) so that $\omega_A = 2\,\omega_B$, both speeds being constant, determine the dimensions of the square plate f if the corner P is at the pitch point, and construct the conjugate to be located on shaft B.

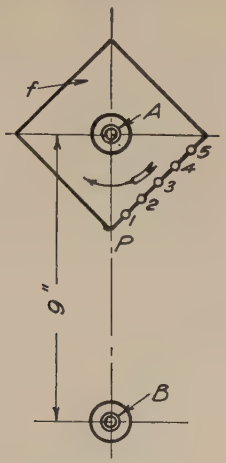

PROB. VII–4

Part 2. If f makes one-half a turn in the direction of the arrow, find the shape of a plate h to be placed on B and be driven by f with pure rolling contact, the dimensions of f to be as found in Part 1. Through how great an angle will B turn while A turns 180°? Give the maximum and minimum values of $\frac{\omega_h}{\omega_f}$

CHAPTER VIII

BODIES IN PURE ROLLING CONTACT

8–1. Pure Rolling Contact consists of such a relative motion of two lines or surfaces that the consecutive points or elements of one come successively into contact with those of the other in their order. As already shown, there is no slipping between two surfaces which have pure rolling contact, that is, all points in contact have the same linear speed.

Two bodies may be rotating on their respective axes, so arranged that, by pure rolling contact, one may cause the other to turn with an angular speed bearing a definite ratio to the angular speed of the driver. This speed ratio may be constant or variable, depending upon the forms of the two bodies. The axes may be *parallel*, *intersecting*, or *neither parallel nor intersecting*.* The present chapter will consider the cases of parallel axes connected by cylinders giving constant speed ratio, intersecting axes connected by cones giving constant speed ratio, parallel axes connected by bodies of irregular outline, giving variable speed ratio, and non-parallel, non-intersecting axes connected by hyperboloids.

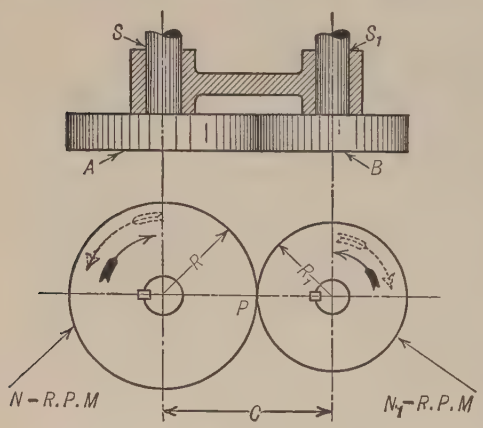

FIG. 8–1

8–2. Cylinders Rolling Together without Slipping. External Contact. In Fig. 8–1 let A be a cylinder fast to the shaft S and B a cylinder fast to the shaft S_1. Assume that the shafts are held by the frame so that their centers are at a distance apart just equal to the sum of the radii of the two cylinders; that is, $R + R_1 = C$. Then the surfaces will touch at P. Suppose also that the nature of the surfaces of the cylinders is such that, as they turn on their respective axes, there can be

* In the case of axes which are neither parallel nor intersecting the coinciding elements of the rolling bodies may slide on each other in the direction of their length, so that the contact is not pure rolling in a strict sense.

no slipping of one surface on the other. Then the surface speed of A must be equal to that of B, and A and B must turn in such directions relative to each other that the element on A which is in contact with B is moving in the same direction as the element on B which it touches. (Notice the arrows in the figure, the full arrows belonging together and the dotted arrows together.)

If A makes N rpm and B makes N_1 rpm,

$$\text{Surface speed of } A = 2\pi RN$$

and

$$\text{Surface speed of } B = 2\pi R_1 N_1$$

Therefore, if the surface speed of A equals the surface speed of B

$$2\pi RN = 2\pi R_1 N_1 \quad \text{or} \quad \frac{N}{N_1} = \frac{R_1}{R} \tag{1}$$

Or, in other words, *the angular speeds of two cylinders which roll together without slipping are inversely proportional to the radii of the cylinders.*

It will be noticed that this principle is the same as that shown in the preceding chapter.

8–3. Solution of Problems on Cylinders in External Contact. In Fig. 8–1 suppose C, N, and N_1 are known; required to find the diameters of the two cylinders. From equation (1)

$$\frac{R}{R_1} = \frac{N_1}{N} \quad \text{or} \quad R = \frac{R_1 N_1}{N}$$

It is known also that $R + R_1 = C$. R and R_1 can, therefore, be found by solving these as simultaneous equations.

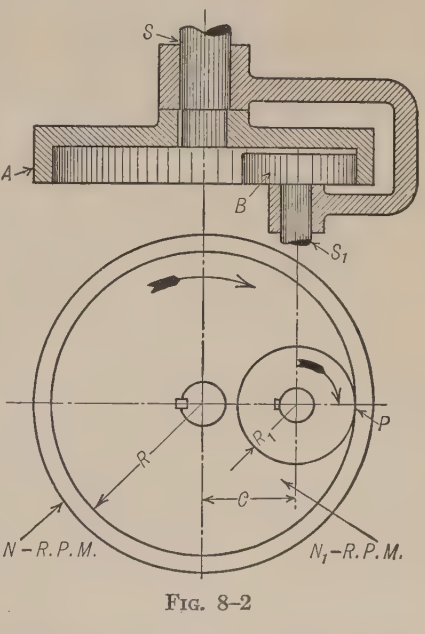

FIG. 8–2

8–4. Cylinders Rolling Together without Slipping. Internal Contact. In Fig. 8–2, where the lettering corresponds to that of Fig. 8–1, the cylinder A is hollow with B inside it, so that the contact is between the inner surface of A and the outer surface of B. This is called *internal contact.* The same mathematical reasoning will apply here as in Fig. 8–1, and equation (1) will hold true. The distance between centers now,

however, is equal to $R - R_1$ instead of $R + R_1$. The two cylinders in Fig. 8–2 will turn in the same sense instead of in opposite senses.

8–5. Solution of Problems on Cylinders in Internal Contact. In Fig. 8–2, if C, N, and N_1 are known; to find the diameters of the cylinders.

From equation (1)

$$\frac{R}{R_1} = \frac{N_1}{N}$$

It is also known that $R - R_1 = C$. These may be solved as simultaneous equations to find R and R_1, and therefore the diameters.

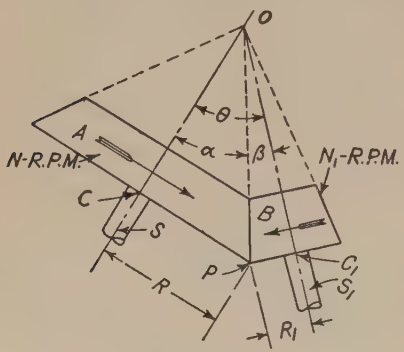

FIG. 8–3

8–6. Cones Rolling Together without Slipping. In the preceding discussion relating to cylinders, the shafts were necessarily parallel. It is often required to connect two shafts which lie in the same plane but make some angle with each other. This is done by means of right cones or frustums of cones as shown in Fig. 8–3, the cones having a common apex. The same reasoning applies to the ratio of speeds at the base of the cones as to the circles representing the cylinders in Fig. 8–1. That is,

$$\frac{N}{N_1} = \frac{R_1}{R} \tag{2}$$

But $R_1 = OP \sin POC_1$ and $R = OP \sin POC$.

Therefore

$$\frac{R_1}{R} = \frac{OP \sin POC_1}{OP \sin POC} = \frac{\sin POC_1}{\sin POC}$$

Substituting this expression in equation (2)

$$\frac{N}{N_1} = \frac{\sin POC_1}{\sin POC} \tag{3}$$

Therefore, the angular speeds of two cones rolling together without slipping are inversely as the sines of the half angles of the cones.

If it is assumed that the sense of rotation is the sense in which a given shaft is seen to be turning as one looks along the shaft *towards* the intersection of the axes, then there are two cases: (1) opposite sense of rotation of shafts; (2) same sense of rotation of shafts.

Two cones may roll in external contact or internal contact. External contact of cones, however, does not necessarily mean opposite sense of rotation, nor does internal contact necessarily mean same sense of rotation. As will appear later, the kind of contact (external or internal) depends upon the particular combination of angle between shafts, sense relation, and speed ratio.

8–7. Solution of Problems on Cones. Opposite Direction of Rotation. The law stated in the previous article may be utilized to calculate the vertical angles of the cones when the angle between the axes and the speed ratio are known.

Referring to Fig. 8–3, let angle $COC_1 = \theta$,

$$\text{angle } POC = \alpha \quad \text{and} \quad \text{angle } POC_1 = \beta$$

$$\frac{N}{N_1} = \frac{\sin \beta}{\sin \alpha} = \frac{\sin \beta}{\sin (\theta - \beta)} = \frac{\sin \beta}{\sin \theta \cos \beta - \cos \theta \sin \beta}$$

$$= \frac{\dfrac{\sin \beta}{\cos \beta}}{\sin \theta - \cos \theta \dfrac{\sin \beta}{\cos \beta}} = \frac{\tan \beta}{\sin \theta - \cos \theta \tan \beta}$$

Whence
$$\tan \beta = \frac{\sin \theta}{\dfrac{N_1}{N} + \cos \theta} \tag{4}$$

In similar manner
$$\tan \alpha = \frac{\sin \theta}{\dfrac{N}{N_1} + \cos \theta} \tag{5}$$

Graphical Construction. In Fig. 8–4, S and S_1 are two shafts which are to be connected by rolling cones to turn as indicated by the arrows. Their center lines meet at O. S is to make N rpm and S_1 is to make N_1 rpm. Required to find the line of contact of two cones which will connect the shafts, and to draw a pair of cones.

Draw a line parallel to OA, on the side toward which its direction arrow points, at a distance from OA equal to N_1 units. Draw a similar line parallel to OB, N units distant from OB. These two lines intersect at K. A line drawn through O and K will be the line of contact of the required cones. Select any point P on OK and from P draw lines perpendicular to AO and BO meeting AO and BO at M and M_1, respectively. Produce these lines, making $MH = MP$ and $M_1J = M_1P$. Draw HO and JO. Then OPH and OPJ are cones of the proper relative sizes to connect S and S_1 to give the required speeds.

If the point P had been chosen nearer to O, the cones would have had smaller diameters at their bases but the ratio of the diameters would have been the same, or, if P had been chosen farther away from O, the bases would have been larger but still of the same ratio. If frustums

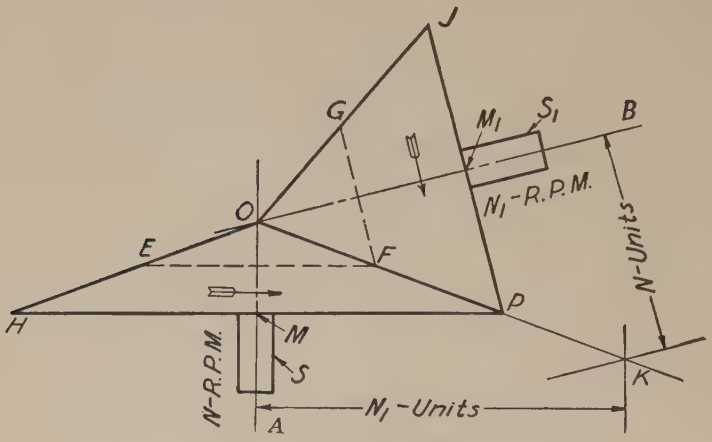

Fig. 8–4

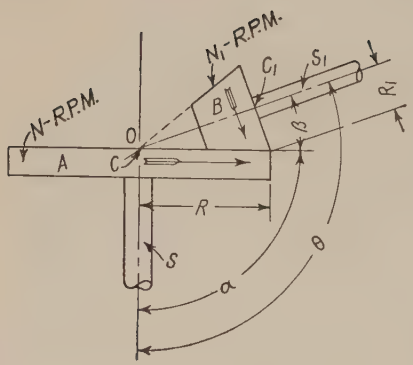

Fig. 8–5

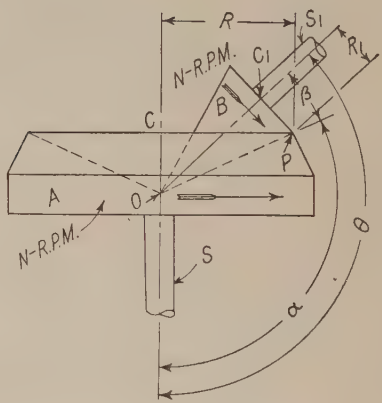

Fig. 8–6

of cones are desired, the cones can be cut off anywhere, as shown by the dotted lines FE and FG.

If (Fig. 8–3) the angle θ is increased, the sense relation and angular speed ratio remaining the same (the angular speed ratio being other than unity), there will be a value of θ such that α, the half angle at the apex of the larger cone, will be 90°.

That is, the cone will become a flat plate as shown in Fig. 8–5. Any

further increase of the angle θ with same angular speed ratio will cause the half angle of the larger cone to become greater than 90° thus giving a case of internal contact as in Fig. 8–6. The shafts are still turning in opposite senses, according to the definition given in § 8–6, and equations (4) and (5) still hold.

8–8. Solution of Problems on Cones. Same Direction of Rotation. The same general methods used in § 8–7 apply to the solution of problems on cones having the same sense of rotation. The equations for the half angles of the cones are derived in the same manner, but differ from equations (4) and (5).

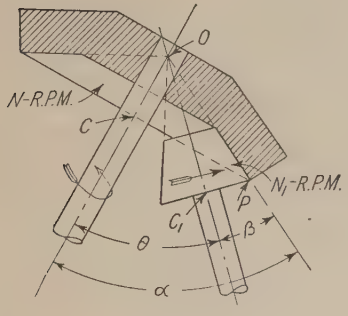

Fig. 8–7

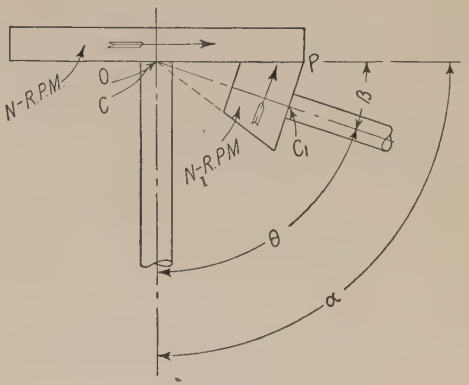

Fig. 8–8

Fig. 8–7 is lettered the same as Fig. 8–3, and θ, N, and N_1 have the same values. The directional relation however is changed. Since $\alpha = \theta + \beta$ and $\beta = \alpha - \theta$ the equations become

$$\tan \alpha = \frac{\sin \theta}{\cos \theta - \dfrac{N}{N_1}} \tag{6}$$

where α is the half angle of the larger cone and

$$\tan \beta = \frac{\sin \theta}{\dfrac{N_1}{N} - \cos \theta} \tag{7}$$

where β is the half angle of the smaller cone.

Figs. 8–8 and 8–9 correspond respectively to Figs. 8–5 and 8–6.

8–9. Rolling Cylinder and Sphere. Fig. 8–10 shows a rolling cylinder and sphere as used in the Coradi planimeter. The segment of the sphere A turns on an axis ac passing through a, the center of the sphere.

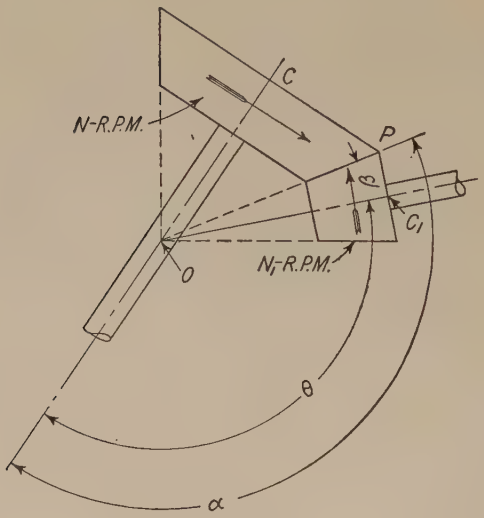

FIG. 8–9

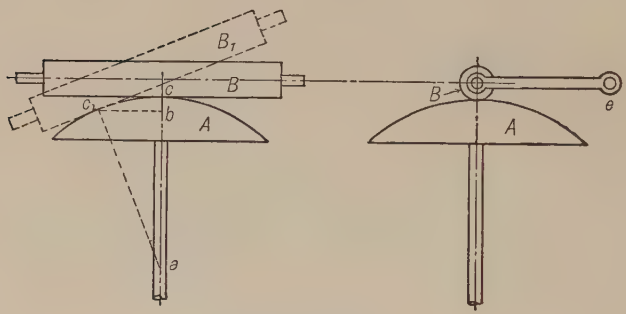

FIG. 8–10

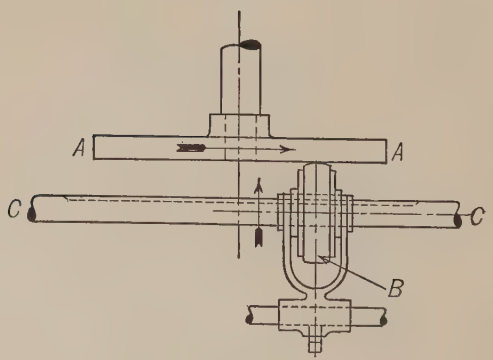

FIG. 8–11

The cylinder B, whose axis is located in a plane also passing through the center of the sphere, is supported by a frame pivoted at e and is held to the cylinder by a spring, not shown. The frame pivots e are movable about an axis at right angles to ac and passing through a, the center of the sphere. When the roller is in the position B with its axis at right angles to ac, the turning of the sphere produces no motion of B; when, however, the roller is swung so that its axis makes an angle bac_1 with its former position, as shown at B_1 by dotted lines, the point of contact is transferred to c_1 in the perpendicular from a to the roller axis. If now we assume the radius of the roller $= R$, the relative motion of roller and sphere, in contact at c_1, is the same as that of two circles of radii R and bc_1 respectively. Transferring the point of contact to the opposite side of ab will result in changing the directional relation of the motion. The action of this device is purely rolling and but very little force can be transmitted. It is used only in very delicate mechanisms.

8–10. Disk and Roller. If in Fig. 8–10 the radius of the sphere ac is assumed to become infinite and the roller B to be replaced by a sphere of the same diameter turning on its axis, the result will be a *disk and roller* as shown in Fig. 8–11, where AA represents the disk and B the roller, made up of the central portion of the sphere.

If we suppose the rotation of the disk to be uniform, the velocity ratio between B and A will constantly decrease as the roller B is shifted nearer the axis of A, and conversely. If the roller is carried to the other side of the axis, it will rotate in the opposite direction to the first.

This combination is sometimes used in feed mechanisms for machine tools, where it enables the feed to be adjusted and also reversed by simply adjusting the roller on the shaft CC.

8–11. Friction Gearing. Rolling cylinders and cones, frequently used to transmit force, constitute what is known as *friction gearing*. The axes are arranged so that they can be pressed together with considerable force, and, in order to prevent slipping, the surfaces of contact are made of slightly yielding materials, such as wood, leather, rubber or paper, which, by their yielding, transform the line of contact into a surface of contact and also compensate for any slight irregularities in the rolling surfaces. Frequently only one surface is made yielding, the other usually being made of iron. As slipping is likely to take place in these combinations, the velocity ratio cannot be depended upon as absolute.

When rolling cylinders or cones are used to change sliding to rolling friction, that is, to reduce friction, their surfaces should be made as hard and smooth as possible. For example, in roller bearings and in the various forms of ball bearings where spheres are arranged to roll in

suitably constructed races, all bearing surfaces are made of hardened steel and ground.

Friction gearing is utilized in several forms of speed-controlling devices, among which the following are good examples:

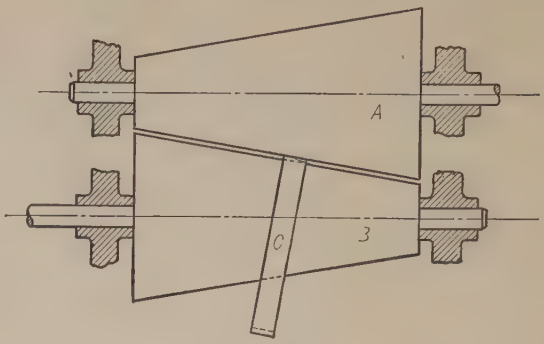

FIG. 8–12

Fig. 8–12 shows the mechanism of the Evans friction cones, consisting of two equal cones A and B turning on parallel axes with an endless movable leather belt C in the form of a ring running between them, the axis of B being urged toward A by means of springs or otherwise. By adjusting the belt along the cones, their angular speed ratio may be varied at will. It should be observed that there must be some slipping since the angular speed ratio varies from edge to edge of the belt, the resulting ratio approaching that of the mean line of the belt. A leather-faced roller might be substituted for the belt and a similar series of speeds obtained, the cones then turning in the same instead of in opposite senses.

Fig. 8–13 shows, in principle, another form, made by the Power and Speed Controller Co. Here two equal rollers, C and D, faced with a yielding material, are arranged to run between two equal hollow disks A and B. The rollers with their supporting yokes (only one of which is shown in the elevation) are arranged as indicated in the figure and are made by a geared connection, not shown, to turn opposite each other on the vertical yoke axes, s. The contour of the hollow in the disks must thus be an arc of a circle of radius equal that of the roller drawn from s as a center. If now the disk B is made fast to the shaft, and A, running loose, is urged toward B by a spring or otherwise, a uniform motion of A may be made to give varying speeds to B by turning the rollers as shown. To increase the power two sets of disks are often used.

8–12. Grooved Friction Gearing. Another form of friction gearing is shown in Fig. 8–14. Here increased friction is obtained between the rolling bodies by supplying their surfaces of contact with a series of interlocking wedge-shaped grooves; the sharper the angle of the grooves, the greater the friction for a given pressure perpendicular to the axes; both wheels are usually made of cast iron. Here the action is no longer that of rolling bodies; but considerable sliding takes place, which varies with the shape and depth of the groove. This form of gearing is very

generally used in hoisting machinery for mines and also for driving rotary pumps; in both cases a slight slipping would be an advantage, as shocks are quite frequent in starting suddenly and their effect is less disastrous when slipping can occur.

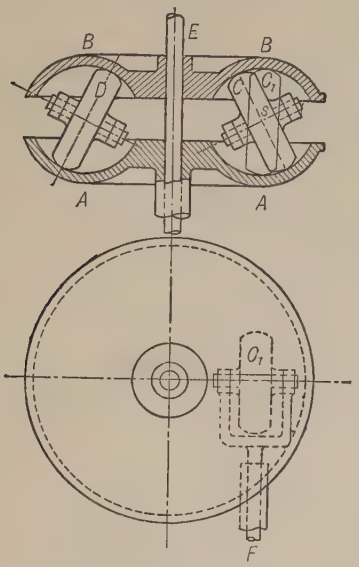

Fig. 8–13

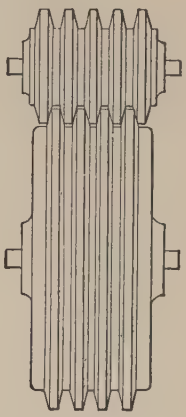

Fig. 8–14

The speed ratio is not absolute but is substantially the same as that of two cylinders in rolling contact on a line drawn midway between the tops of the projections on each wheel, they being supposed to be in working contact.

8–13. Rolling of Non-Circular Surfaces. If the angular speed ratio of two rolling bodies is not a constant, the outlines will not be circular. Whatever forms of curves the outlines take, the conditions of pure rolling contact should be fulfilled, namely, the point of contact must be on the line of centers, and the rolling arcs must be of equal length. This was illustrated in the construction given in Fig. 7–10 where the mate to the given curve was found by making the sum of the radiants constant and the lengths of the rolling arcs equal.

There are four simple cases of curves which may be arranged to fulfil these conditions:

A pair of logarithmic spirals of the same obliquity.
A pair of equal ellipses.
A pair of equal hyperbolas.
A pair of equal parabolas.

8–14. The Rolling of Two Logarithmic Spirals of Equal Obliquity. Fig. 8–15 shows the development of a pair of such spirals, where, if they roll on the common tangent TT_1, the axes A and B will move along the lines XX and ZZ respectively. The arcs F_1P, PF_5, etc., being equal to

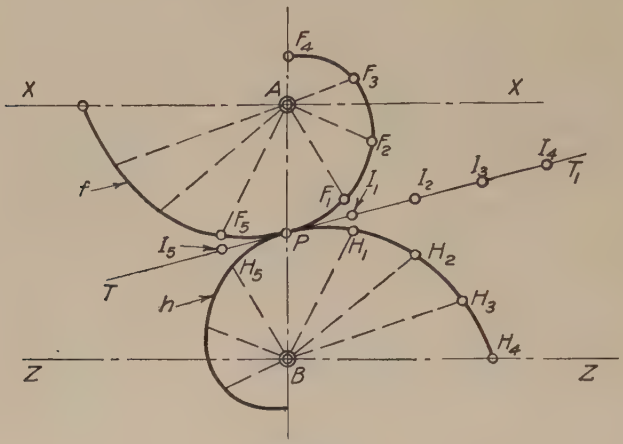

Fig. 8–15

H_1P, PH_5, etc., and also equal to the distances I_1P, PI_5, etc., on the common tangent, it will be clear that, if the axes A and B are fixed, the spirals may turn, fulfilling the conditions of perfect rolling contact; for the arc $PF_5 = PH_5$ and also the radiant AF_5 + radiant $BH_5 = AP + BP$; and similarly for successive arcs and radiants.

To construct two spirals, as in Fig. 8–15, with a given obliquity. The equation for such a logarithmic spiral is

$$r = ae^{b\theta}$$

where a is the value of r when θ is zero; and $b = \dfrac{1}{\tan \beta}$, β being the constant angle between the tangent to the curve and the radiant to the point of tangency, and where e is the base of the Napierian logarithms.

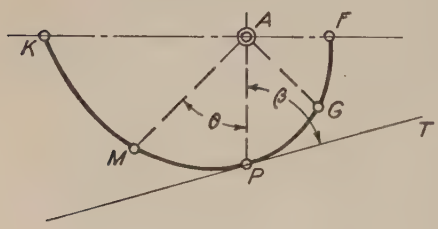

Fig. 8–16

In Fig. 8–16, let $AP = a$ and $APT = \beta$. Taking successive values of θ, starting from AP, we may calculate the values of r and thus plot the curve. If, however, it is desired to pass a spiral

through two points on radiants a given angle apart, it is to be noticed from the equation of the curve that, if the successive values of θ are taken with a uniform increase, the lengths of the corresponding radiants will be in geometrical progression. To draw a spiral through the points F and K, Fig. 8–16, bisect the angle FAK. In the figure AP is the bisector. Make AP a mean proportional between AF and AK; P will be a point on the spiral. Then by the same method bisect PAK, and find AM; also bisect FAP and find AG; and so on; a smooth curve through the points thus found will be the desired spiral.

Continuous Motion. Since these curves are not closed, one pair cannot be used for continuous motion; but a pair may be well adapted to sectional wheels requiring a varying angular speed ratio.

For example, the curves in Fig. 8–15 are so proportioned that if f turns right handed 180° from the position shown h will turn left handed through an angle of 90°; but if f turns left handed 90° h will turn right handed through an angle of 180°.

Given the distance AB, the maximum and minimum angular speed ratio, and the angle through which the driver is to turn, a pair of spirals may be constructed applying the principles already suggested.

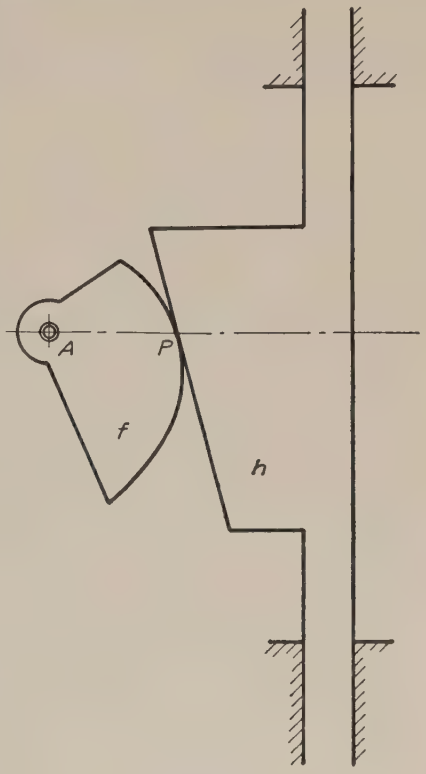

Fig. 8–17

Logarithmic Spiral Driving Slide. Fig. 8–17 shows a logarithmic spiral sector f driving a slide h. Here the driven surface of the slide coincides with the tangent to the spiral, the line of centers being from A through P to infinity and perpendicular to the direction of motion of the slide. In this combination the linear speed of the slide will equal the angular speed of f multiplied by the length of the radiant in contact AP.

Wheels Using Logarithmic Spirals Arranged to Allow Complete Rotations. By combining two sectors from the same or from different spirals, unilobed wheels may be found which may be paired in such a

way as to fulfil the laws of perfect rolling contact. Taking two equal sectors from the same spiral, we should have a symmetrical unilobed wheel, as f (Fig. 8–18), and this will run perfectly with a wheel h exactly like f, as shown. If f is the driver, the minimum angular speed of h will occur when the wheels are in the position shown. The maximum angular speed of h will occur when the points F and H are in contact. Such wheels are readily formed, if the maximum and min-

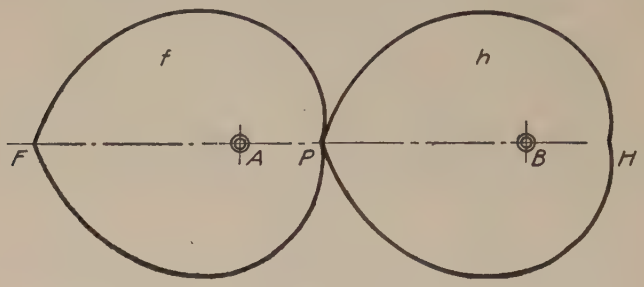

Fig. 8–18

imum angular speed ratios are known. It is to be noted that the minimum ratio must be the reciprocal of the maximum ratio, and that the angle which each sector subtends must be 180°. Unilobed wheels need not be formed from equal sectors, in which case the sectors used will not have the same obliquity nor will the subtended angles be equal, but the wheels must be so paired that sectors of the same obliquity shall be in contact. With a pair of such wheels the maximum and minimum angular speed ratios occur at unequal intervals; however, the minimum angular speed ratio must here also be the reciprocal of the maximum ratio.

By a similar method wheels may be formed which will give more than one position of maximum and of minimum angular speed ratio; that is, there may be either symmetrical or unsymmetrical bilobed wheels, trilobed wheels, etc.

8–15. The Rolling of Equal Ellipses. If two equal ellipses, each turning about one of its foci, are placed in contact in such a way that the distance between the axes AD, Fig. 8–19, is equal to the major axis of the ellipses, they will be in contact on the line of centers and the rolling arcs are of equal length. With the point P on the line of centers AD, we have $AP + PD = AD = AP + PB$ and therefore $PB = PD$. Since the tangent to an ellipse at any point, as P, makes equal angles with the radii from the two foci, $APT = BPT_1$ and $CPT = DPT_1$; but since $PB = PD$ the point P is similarly situated in the two ellipses, and therefore the angle APT would equal the angle

DPT_1, which would give a common tangent to the two curves at P. Hence, if AD is equal to the major axis, the ellipses could be in rolling contact on the line AD. Since the distances PB and PD, from the foci B and D respectively, are equal, it also follows that the arc PF_1 is equal to the arc PH_1 which completes the requirements for perfect rolling contact. It will also be noted that the line BPC will be straight and that a link could connect B and C as mentioned in § 6–11.

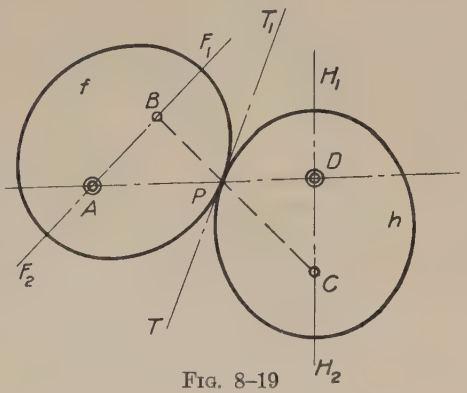

FIG. 8–19

If f (Fig. 8–19) is the driver, the angular speed ratio $\frac{\omega_h}{\omega_f}$ will vary from a minimum when F_2 and H_2 are in contact, and then equal to $\frac{AF_2}{DH_2}$, to a maximum when F_1 and H_1 are in contact, when it will equal $\frac{AF_1}{DH_1}$. The angular speed ratio will be unity when the major axes are parallel, the point of contact then being midway between A and D.

8–16. The Rolling of Equal Parabolas and Equal Hyperbolas. Two parabolas may be considered as two ellipses with one focus of each at infinity. If one of the parabolas turns about its finite focus and the second one is held in contact with it, if no slipping occurs the second one will have rectilinear translation, that is, it will move around its focus which is infinitely distant.

If two equal hyperbolas are pivoted about their foci, properly located with respect to each other, the hyperbolas will turn in pure rolling contact through a limited range of motion. The simplest way to lay out such a pair of hyperbolas would be to find the centrodes of a pair of links as suggested in § 6–11.

A complete discussion of rolling parabolas and hyperbolas would require more space here than their importance warrants. The principles involved are the same as in rolling ellipses and may be worked out along the same lines if occasion requires.

8–17. Rolling Hyperboloids. An hyperboloid of circular cross section is a solid of revolution, and its surface may be generated by a straight line revolving about an axis to which it is not parallel and which it does not intersect. Therefore, in Fig. 8–20, if line TT revolves

about the fixed axis S it will generate the surface of the hyperboloid k, and if TT revolves about the fixed axis Z it will generate the surface of the hyperboloid g. Then k and g will be tangent along TT. Now if the proper relation exists between α, β, and the gorge radii R_k and

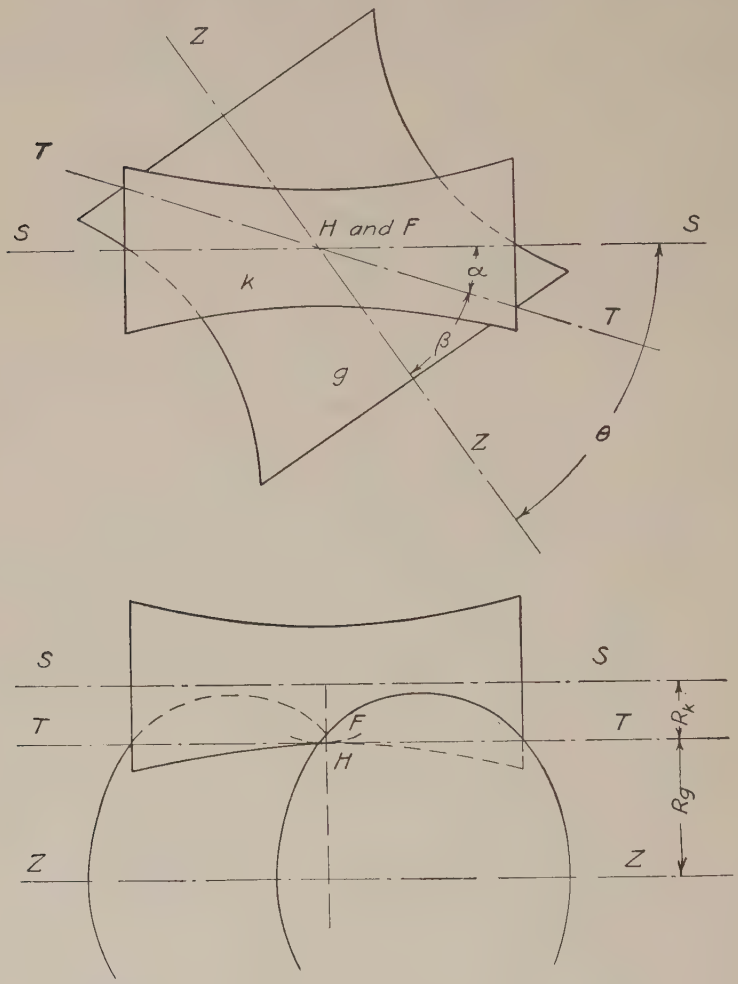

Fig. 8–20

R_g, k and g will roll together analogously to two cones on intersecting axes. Imagine an infinitesimal groove cut on k along TT and a corresponding raised line on g. Then if k is turned, any two contact points as F and H will have the same velocity component perpendicular to TT and the only sliding which occurs is along TT.

To determine the relation which must exist between α, β, R_k, and R_g in order that this action may take place properly along the entire contact line the following method may be used. In Fig. 8-21 the horizontal projections of the axes S and Z intersect at O and make an angle θ with each other. To find hyperboloids to be located on these axes and

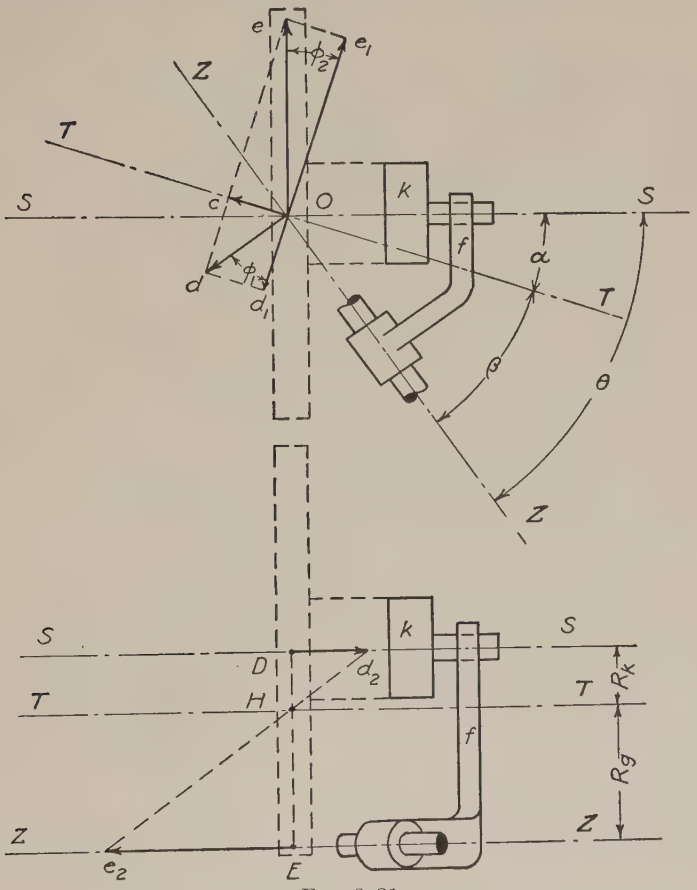

Fig. 8–21

roll as previously described. The angular speed of the hyperboloid on S to be ω_k and that on Z to be ω_g. We must find α, β, R_k, and R_g.

Assume an arm f turning about fixed axis Z at angular speed ω_f equal to ω_g but in opposite sense. Let f carry a shaft on which is a body k. The axis of this shaft at the instant coincides with S. Body k is turning relative to f at angular speed ω_r equal to ω_k and in the same sense. No true instantaneous axis for k exists, but there is a " central axis "

TT along which all points on k have the same component of velocity while the components around TT are directly proportional to their distances from TT. To find TT assume k to be enlarged as shown dotted until it includes points D and E at the ends of the common perpendicular between S and Z. Then the velocity of D about S is zero, and the velocity of E about Z is zero. That is, $v_D = \omega_f \times DE$ and $v_E = \omega_k \times DE$. Draw, in plan view, $Od = v_D$ perpendicular to ZZ and $Oe = v_E$ perpendicular to SS. Draw ed. Then a line through O perpendicular to ed is the horizontal projection of the required central axis, TT, since the two points D and E and hence all points on k have the velocity component Oc along TT. D and E have components Od_1 and Oe_1 respectively about TT; and TT in the vertical projection must cut DE at a point whose distances from S and Z are in the ratio of Od_1 and Oe_1. Make $Dd_2 = Od_1$ and $Ee_2 = Oe_1$. Draw d_2e_2 cutting DE at H. Then a line through H parallel to the vertical projections of S and Z is the vertical projection of TT.

As f revolves about Z the line TT will trace the surface of an hyperboloid g of revolution about Z with gorge radius $HE = R_g$. Now if S is fixed and f is revolved about S taking line TT with it TT will trace the surface of an hyperboloid about S with gorge radius $HD = R_k$. The body k may be considered a part of this hyperboloid. Then with Z and g fixed and f revolving, the hyperboloid k will roll on the fixed one with sliding along the element of contact.

Since the relative motions of the members of a mechanism remain the same regardless of which is the fixed one, we may fix both S and Z and turn the hyperboloid k at speed $\omega_r = \omega_k$. The hyperboloid g on Z will turn at speed $-\omega_f = \omega_g$.

We have thus found α, β, R_k, and R_g graphically. They may be found algebraically as follows:

From inspection of Fig. 8–21 it is evident that $\phi_1 = \beta$ and $\phi_2 = \alpha$, also $ee_1 = dd_1 = Oc$.

Then $ee_1 = Oe \sin \phi_2 = \omega_r \cdot DE \sin \alpha = \omega_k \cdot DE \sin (\theta - \beta)$, and $Od_1 = \omega_f \cdot DE \cos \phi_1 = \omega_g \cdot DE \cos \beta$.

$$\tan \beta = \frac{dd_1}{Od_1} = \frac{ee_1}{Od_1} = \frac{\omega_k \sin (\theta - \beta)}{\omega_g \cos \beta} = \frac{\sin \theta}{\frac{\omega_g}{\omega_k} + \cos \theta} \tag{8}$$

$$\frac{R_k}{R_g} = \frac{Dd_2}{Ee_2} = \frac{Od_1}{Oe_1} = \frac{\frac{Oc}{\tan \beta}}{\frac{Oc}{\tan \alpha}} = \frac{\tan \alpha}{\tan \beta} \tag{9}$$

The correctness of action of the hyperboloids h and g, as above designed, may be further shown by velocity vectors. In Fig. 8–22 choose any two coincident points M and Q on the element of contact TT

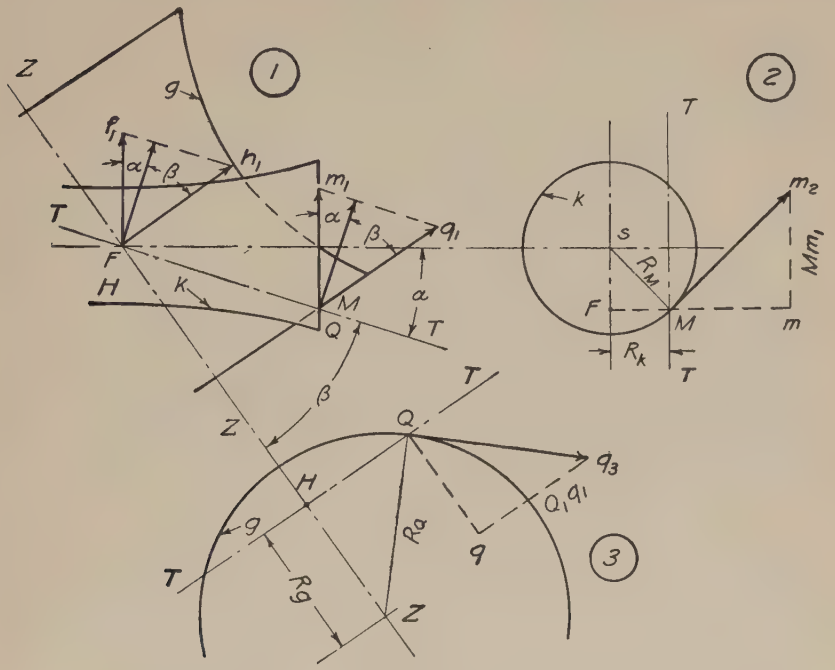

FIG. 8–22

(M being on k and Q on g). In view (2) draw $Mm_2 = \omega_k \cdot R_M$, and find in view (1) its projection M_1m_1. Find Qq_1 by drawing m_1q_1 parallel to TT. Then from Qq_1 find in view (3) Qq_3. Let $\dfrac{Qq_3}{R_Q} = \omega_Q$. To show that $\omega_Q = \omega_g = \dfrac{Hh_1}{R_g}$. From similar triangles in view (2)

$$Mm_1 = R_k \frac{Mm_2}{R_M} = \omega_k R_k \tag{I}$$

and in view (3)

$$Qq_1 = R_g \frac{Qq_3}{R_Q} = \omega_Q R_g \tag{II}$$

But from view (1)

$$\frac{Qq_1}{Mm_1} = \frac{\cos \alpha}{\cos \beta}$$

and from equations (I) and (II) $\frac{Qq_1}{Mm_1} = \frac{\omega_Q R_g}{\omega_k R_k}$. Hence

$$\frac{\omega_Q}{\omega_k} = \frac{R_k \cos \alpha}{R_g \cos \beta} \tag{III}$$

Again, in view (1), $Ff_1 = \omega_k R_k$ and $Hh_1 = \omega_g R_g$; also

$$\frac{Ff_1}{Hh_1} = \frac{\cos \beta}{\cos \alpha}. \quad \text{Hence}$$

$$\frac{\omega_g}{\omega_k} = \frac{R_k \cos \alpha}{R_g \cos \beta} \tag{IV}$$

Therefore from (III) and (IV) $\omega_Q = \omega_g$. The same holds true for any points on TT. Therefore the velocities resulting from equal components perpendicular to TT are such as to give a constant angular velocity ratio between right sections of the two hyperboloids at all points along the element of contact.

PROBLEMS

VIII–1. A cylinder 24 in. in diameter on shaft S drives, by pure rolling contact, another cylinder g on shaft T. Shaft S has an angular speed of 600 radians per minute. Shaft T turns $143\frac{1}{4}$ rpm in the opposite direction from S. Calculate the diameter of cylinder g and the distance between the axes of the shafts.

VIII–2. Two shafts connected by rolling cylinders turn in the same direction 150 rpm and 100 rpm respectively. The smaller cylinder is 16 in. in diameter. How far apart are the axes of the shafts?

VIII–3. Angular speed of $S = \frac{1}{3}$ of the angular speed of T. Calculate and find graphically the diameters of cylinders to connect them:

(*a*) When they turn as shown by the full arrows.

(*b*) When they turn as shown by the dotted arrows.

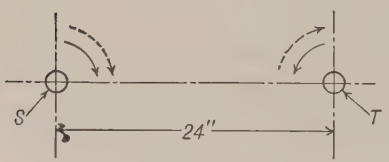

PROB. VIII–3

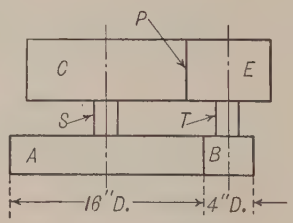

PROB. VIII–4

VIII–4. A and B are rolling cylinders connecting the shafts S and T. C and E are cylinders fast to these shafts and slipping on each other at P. Find the diameters of C and E if the surface speed of E is twice that of C.

VIII–5. Two solids of right section shown in the figure turn about the axes A and B. Pure rolling contact takes place between the circular arcs. What is the angular speed ratio for the position shown? Determine the size of the angles α, β, and κ in degrees and of the radii x and y in inches.

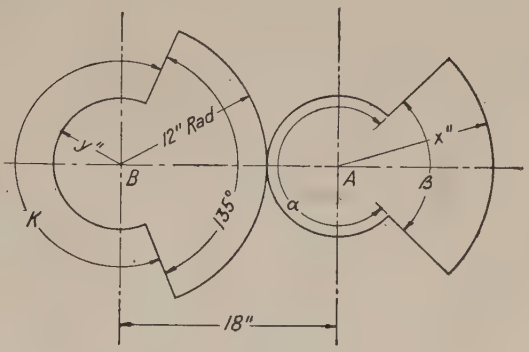

PROB. VIII–5

VIII–6. Two shafts, having axes in the same plane intersecting at an angle of 45°, turn in opposite senses at 30 rpm and 90 rpm respectively. Draw a pair of cones which shall be of the proper form to be located on these shafts and turn in pure rolling contact. Diameter of base of smaller cone is 1 in. Calculate the half angles at the vertices of the cones.

VIII–7. Same as VIII–6 except that the shafts turn in the same sense.

VIII–8. A turns 100 and B 150 rpm as shown and are connected by rolling cones. Calculate the apex angle of each cone. If the base of cone on A is 3 in. from the vertex, calculate the diameters of both cones. Solve also graphically.

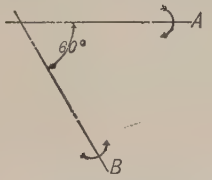

PROB. VIII–8

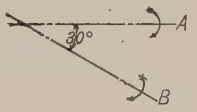

PROB. VIII–9

VIII–9. Two shafts A and B are connected by rolling cones and turn as shown. A makes 300 rpm while B makes 100 rpm. Calculate the apex angle of each cone and the diameter of each base if the base of cone B is 2 in. from the vertex. Solve also graphically.

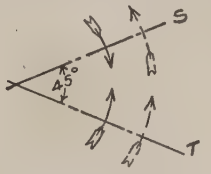

PROB. VIII–10

VIII–10. Shaft S makes 180 rpm and shaft T makes 60 rpm. Draw a pair of frustums of cones to connect them. Base of smaller cone 1 in. in diameter. Element of contact 1 in. long.

(*a*) When the shafts turn as shown by the full arrows.

(*b*) When they turn as shown by the dotted arrows.

VIII–11. Shafts A, B, and C are connected by cones in external rolling contact so that the revolutions $A : B : C = 3 : 2 : 4$. If the diameter of cone B is 6 in. draw in the three cones giving the diameters of cones A and C. (Show method clearly.)

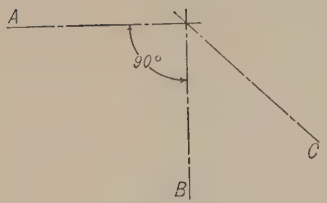

PROB. VIII–11

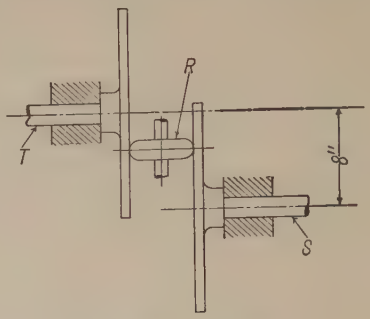

PROB. VIII–12

VIII–12. How far from the axis of T will the center of the roller R be located if the angular speed of shaft S is three times as great as that of T?

VIII–13. A and B are two shafts at right angles, in the same vertical plane. C is a disk carried by supporting yoke on a horizontal shaft arranged so that C is always in contact with the equal conoids on A and B. A turns at a constant speed of 60 rpm. What is the maximum speed of B? What is the minimum speed of B? What is the speed of B when the yoke supporting C has turned 30° from its present position? (Assume no slipping.)

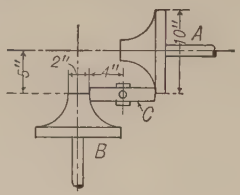

PROB. VIII–13

VIII–14. Two horizontal shafts are so located that in the plan view their axes intersect at an angle of 60°. The lower shaft ZZ is in a horizontal plane $3\frac{1}{2}$ in. below the horizontal plane containing the upper shaft SS. The upper shaft is turning at twice the angular speed of the lower one.

Draw plan and elevation of the axes. Compute the angle made with each of the axes by the common tangent TT to a pair of hyperboloids which will connect the axes. Compute the gorge radii of the hyperboloids.

Draw the common tangent in the two views.

CHAPTER IX

GEARS AND GEAR TEETH

9–1. Gear Drives. It was shown in Chapter VIII that one shaft could cause another to turn by means of two bodies in pure rolling contact. If the speed ratio must be exact or if much power is to be transmitted, a drive depending solely upon friction between the surfaces of the rolling bodies is not sufficiently positive. For this reason toothed wheels, called gears, are used in place of the rolling bodies. As the gears turn, the teeth of one gear slide on the teeth of the other but are so designed that the angular speeds of the gears are the same as those of the rolling bodies which they replace. Gear teeth constitute a direct application of the principles of sliding contact discussed in Chapter VII.

9–2. Gearing Classified. In § 8–1 attention was called to the fact that rolling bodies may be used to connect axes which are parallel, intersecting, or neither parallel nor intersecting. The same cases arise in the use of gears, and special names are given to the gears according to the case for which they are designed.

Gears may be classified on the above basis as follows:

Spur gears	External gears — Fig. 9–1.	Connecting parallel axes.
	Internal gears — Fig. 9–21. (Here the large gear is called an annular and the small one a pinion.)	
	Twisted spur or helical gear — Fig. 9–31.	
	Herring bone spur gear — Fig. 9–32.	
	Rack and pinion — Fig. 9–18. (The rack is a gear of infinite radius.)	
	Pin gearing — Fig. 9–33.	
Bevel gears	Plain bevel (including miter gears, which are equal bevel gears on shafts at 90°) — Fig. 9–36.	Connecting intersecting axes.
	Crown gears — Fig. 9–40.	
	Twisted bevel gears — Fig. 9–43.	
Hyperboloidal or skew gears — Fig. 9–44.		Connecting axes in different planes.

Screw gearing { Worm and wheel — Fig. 9–45. / Helical gears — Fig. 9–46. } Connecting axes in different planes.

The name **pinion** is often applied to the smaller of a pair of gears.

The various kinds of gears enumerated above will be discussed in more detail after the principles which apply to gearing in general have been considered.

9–3. External Spur Gears. Fig. 9–1 shows a pair of external spur gears in mesh with each other. Since these are the simplest form of gears the following discussion of definitions and general principles will be based on this type of gears. It must be borne in mind, however, that these definitions and principles are general and apply to the other types of gears as well as spur gears.

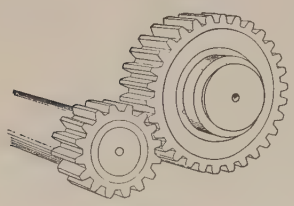

Fig. 9–1

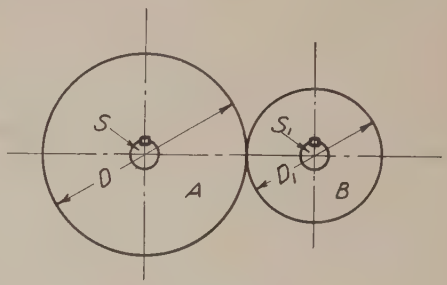

Fig. 9–2

9–4. Speed Ratio of a Pair of Gears. It has been shown in the preceding chapter that if two cylinders as A and B, Fig. 9–2, are keyed to the shafts S and S_1 respectively, the angular speed of S is to the angular speed of S_1 as D_1 is to D, provided there is sufficient friction between the circumferences of the disks to prevent one slipping on the other. To make sure that there shall be no slipping, wheels having teeth around their circumferences are substituted for the plain disks. The outlines of these teeth must be such that the speed ratio is constant. Such a pair of wheels is shown in Fig. 9–3. Here the larger gear has 16 teeth and the smaller 12. Assume that the shaft S is being turned from some external source of power; the gear A, since it is keyed to S, will turn with it. Then the teeth on A will push the teeth on B, a tooth on A coming in contact with a tooth on B and pushing that tooth along until the gears have turned so far around that those two teeth swing out of reach of each other. In order for B to make a complete revolution each one of its 12 teeth must be pushed along thus past the center line. Therefore, while B turns once 12 of the teeth on A must pass the center line. Since A has 16 teeth in all, A will therefore make $\frac{12}{16}$

of a turn while B makes one turn. In other words, *the turns of A in a given time are to the turns of B in the same time as the number of teeth on B are to the number of teeth on A.*

It is evident that the distance from the center of one tooth to the center of the next tooth on both gears must be alike in order that the teeth on one may *mesh* into the spaces on the other.

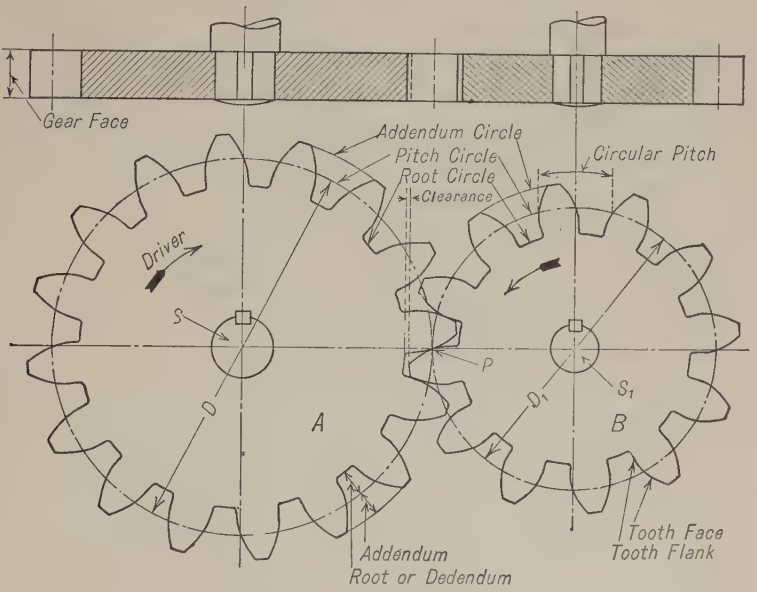

FIG. 9–3

9–5. Pitch Circles and Pitch Point. Let a point P (Fig. 9–3) be found on the center line SS_1 such that $\frac{PS}{PS_1} = \frac{\text{Teeth on } A}{\text{Teeth on } B}$ and through this point draw circles about S and S_1 as centers. Call their diameters D and D_1. Then $D = 2\,PS$ and $D_1 = 2\,PS_1$. Since, as shown above,

$$\frac{\text{Revolutions of } B}{\text{Revolutions of } A} = \frac{\text{Teeth on } A}{\text{Teeth on } B}$$

therefore

$$\frac{\text{Revolutions of } B}{\text{Revolutions of } A} = \frac{D}{D_1}$$

That is, the two gears when turning will have the same speed ratio as two rolling cylinders of diameters D and D_1. The point P which divides the line of centers of a pair of gears into two parts proportional to the number of teeth in the gears is called the **pitch point.** (See § 7–4.)

The circle D, drawn through P with center at S, is the **pitch circle** of the gear A, and the circle D_1 is the **pitch circle** of the gear B.

9–6. Addendum and Root Circles. The circle passing through the outer ends of the teeth of a gear is called the **addendum circle,** and the circle passing through the bottom of the spaces is called the **root circle.**

9–7. Addendum Distance and Root Distance. Length of Tooth. The radius of the addendum circle minus the radius of the pitch circle is the **addendum distance,** or, more commonly, the **addendum.** The radius of the pitch circle minus the radius of the root circle is the **root distance** or **dedendum.** The dedendum plus the addendum is the **length of tooth.**

9–8. Face and Flank of Tooth. Acting Flank. That portion of the tooth curve which is outside the pitch circle is called the **face of the tooth** or **tooth face.** This must not be confused with the term "face of gear" (§ 9–9). The part of the tooth curve inside the pitch circle is called the **flank of the tooth.**

That part of the flank which comes in contact with the face of the tooth of the other gear is called the **acting flank.**

9–9. Face of Gear. The length of the gear tooth measured along an element of the pitch surface is called the length of the face of the gear or **width of face** of the gear. (See top view, Fig. 9–3.)

9–10. Clearance. The distance measured on the line of centers, between the addendum circle of one gear and the root circle of the other, when they are in mesh, is the **clearance.**

This is evidently equal to the dedendum of one gear minus the addendum of the mating gear.

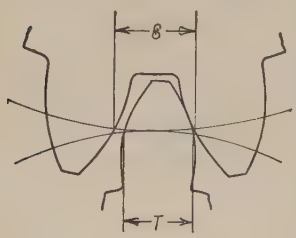

FIG. 9–4

9–11. Backlash. The width of a tooth, measured on the pitch circle, is less than the width of the space of the gear with which it is in mesh. The difference between the width of space and width of tooth is called the **backlash.** This is shown in Fig. 9–4 where S minus T is the backlash, S and T being understood to be measured on the arcs of the pitch circles. Accurately made gears have very little backlash, but cast gears or roughly made gears require considerable backlash.

9–12. Circular Pitch. The distance from the center of one tooth to the center of the next tooth, measured on the pitch circle, is called the **circular pitch.** This is, of course, equal to the distance from any point on a tooth to the corresponding point on the next tooth measured along the pitch circle. (See Fig. 9-3.) *The circular pitch is equal to the width*

of tooth plus the width of the space between teeth, measured on the pitch circle. The whole circumference of the pitch circle is equal to the circular pitch multiplied by the number of teeth, or the circular pitch is equal to the circumference of the pitch circle divided by the number of teeth. In Fig. 9–3 let T represent the number of teeth in the gear A and let C represent the circular pitch. Then

$$C = \frac{\pi D}{T} \tag{1}$$

Two gears which mesh together must have the same circular pitch.

9–13. Diametral Pitch is the term ordinarily used to indicate the relation between the number of teeth in a gear and the diameter of its pitch circle. *The diametral pitch is equal to the number of teeth divided by the diameter of the pitch circle.* Using the same notation as in § 9–12 and letting P_d equal the diametral pitch

$$P_d = \frac{T}{D} \tag{2}$$

This is evidently the number of teeth per inch of diameter. The reciprocal of the diametral pitch, called the *module*, is often used for metric gears. This is the amount of diameter per tooth and is equal to the circular pitch divided by π.

9–14. Relation between Circular Pitch and Diametral Pitch. From equation (1)

$$C = \frac{\pi D}{T}$$

and from equation (2)

$$P_d = \frac{T}{D}$$

Therefore

$$CP_d = \pi \tag{3}$$

That is, the product of the circular pitch and the diametral pitch is equal to π.

9–15. Angle and Arc of Action. (See also § 7–4.) The angle through which the driving gear turns while a given tooth on the driving gear is pushing the corresponding tooth on the driven gear is called the **angle of action of the driver.** Similarly, the angle through which the driven gear turns while a given one of its teeth is being pushed along is called the **angle of action of the driven gear.** The **angle of approach,** in each case, is the angle through which the gear turns from the time a pair of teeth come into contact until they are in contact at the pitch point. It

will be shown later that the pitch point is one of the points of contact of a pair of teeth during the action. The **angle of recess** is the angle turned through from the time of pitch point contact until contact ceases.

The angle of action is therefore equal to the angle of approach, plus the angle of recess.

In Fig. 9–5 a tooth M on the driving gear is shown (in full lines) just beginning to push a tooth N on the driven gear. The dotted lines show the position of the same pair of teeth when N is just swinging out of reach of M. While M has been pushing N, any radial line on the

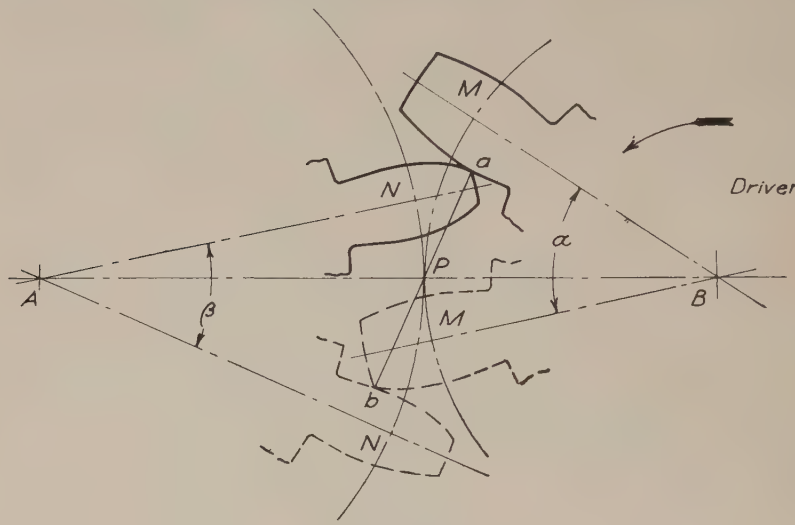

Fig. 9–5

gear B, as, for example, the line drawn through the center of the tooth M, has swung through the angle α, and any line on gear A has swung through the angle β. α is, therefore, the angle of action of the gear B, and β is the angle of action of the gear A.

It should be noted that the angles of approach and recess are *not shown* in Fig. 9–5.

The **arc of action** is the arc of the pitch circle which subtends its angle of action. The **arcs of approach** and **recess** bear the same relation to the angles of approach and recess as the arc of action bears to the angle of action. Since the arcs of action on both gears must be equal, the angles of action must be inversely as the radii.

Therefore the following equation holds true:

$$\frac{\textit{Angle of action of driver}}{\textit{Angle of action of driven gear}} = \frac{\textit{Number of teeth on driven gear}}{\textit{Number of teeth on driver}} \qquad (4)$$

The arc of action must never be less than the circular pitch, for, if it were, one pair of teeth would cease contact before the next pair came into contact.

9–16. The Path of Contact. Referring still to Fig. 9–5, the teeth as shown in full lines are touching each other at one point a. This point is really the projection on the plane of the paper of a line of contact equal in length to the width of the gear face. (See § 9–9.) In the position shown dotted, the teeth touch each other at the point b. If the teeth were drawn in some intermediate position, they would touch at some other point. For every different position which the teeth occupy during the action of one pair of teeth they have a different point of contact. A line drawn through all the points at which the teeth touch each other (in this case the line aPb) is called the **path of contact.** This may be a straight line or a curved line, depending upon the nature of the curves which form the tooth outlines. In all properly constructed gears the pitch point P is one point on the path of contact.

9–17. Obliquity of Action or Pressure Angle. The angle between the line drawn through the pitch point perpendicular to the line of centers, and the line drawn from the pitch point to the point where a pair of teeth are in contact, is called the **angle of obliquity** of action or **pressure angle.** In some forms of gear teeth this angle remains constant; in others it varies.

The direction of the force which the driving tooth exerts on the driven tooth is along the line drawn from the pitch point to the point where a pair of teeth are in contact. (See § 9–18.) The smaller the angle of obliquity the greater will be the component of the force in the direction to cause the driven gear to turn and the less will be the tendency to force the shafts apart. In other words, a large angle of obliquity tends to produce a large pressure on the bearings.

9–18. Law Governing the Shape of the Teeth. The curves which form the outline of the teeth on a pair of gears may, in theory at least, have any form whatever, provided they conform to one law, namely: *The line drawn from the pitch point to the point where the teeth are in contact must be perpendicular to a line drawn through the point of contact tangent to the curves of the teeth.*

That is, the common normal to the tooth curves at all points of contact must pass through the pitch point.

This is illustrated in Fig. 9–6. The teeth in the full-line position touch each other at a. That is, the curves are tangent to each other at this point. The line ST is drawn tangent to the two curves at a. The curves must be made so that this tangent line is perpendicular to the line drawn from a to P. Similarly, in the dotted position the line VW

which is tangent to the curves at their point of contact b must be perpendicular to the line bP. This must hold true for all positions in which

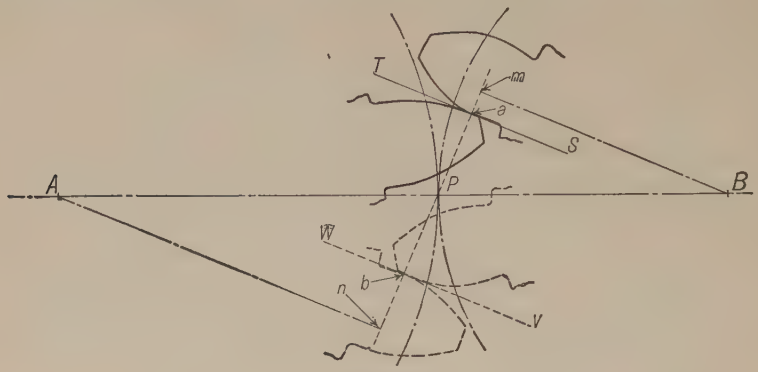

Fig. 9–6

a pair of teeth are in contact, in order that the speed ratio of the gears shall be constant. The proof of this law was given in §§ 7–2 and 7–3.

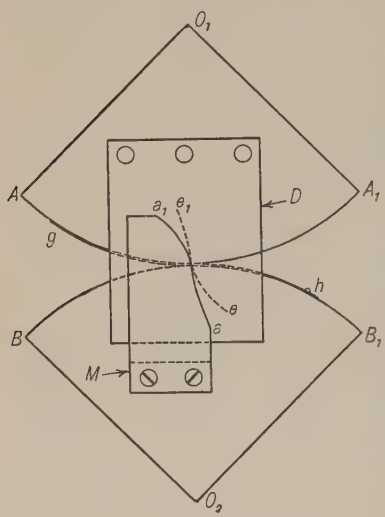

Fig. 9–7

9–19. Conjugate Curves. Two curves are said to be **conjugate** when they are so formed that they may be used for the outlines of two gear teeth which will work on each other and fulfil the law described in § 9–18.

9–20. To Draw a Tooth Outline Which Shall be Conjugate to a Given Tooth Outline. Given the face or flank of a tooth of one of a pair of wheels; to find the flank or face of a tooth of the other. The solution of this problem depends on the fundamental law, § 9–18. The graphical construction is that given in § 7–5.

Another method of solving the above problem is shown in Fig. 9–7, where O_1 and O_2 are a pair of plates whose edges are shaped to arcs of the given pitch circles, AA_1 and BB_1, due allowance being made for a thin strip of metal, gh, connecting the plates, to insure no slipping of their edges on each other.

Attach to O_2 a thin piece of sheet metal, M, the edge of which is shaped to the given curve aa_1; and to O_1 a piece of paper, D, the piece

M being elevated above O_1 to allow space for the free movement of D. Now roll the plates together, keeping the metallic strip gh in tension, and, with a fine marking point, trace upon the paper D, for a sufficient number of positions, the outline of the curve aa_1. A curve just touching all the successive outlines on D, as ee_1, is the corresponding tooth curve for O_1.

9–21. To Draw the Teeth of a Pair of Gears. When the tooth outlines have been found, and the circular pitch, backlash, addendum, and clearance are known, the teeth may be drawn as shown in Fig. 9–8.

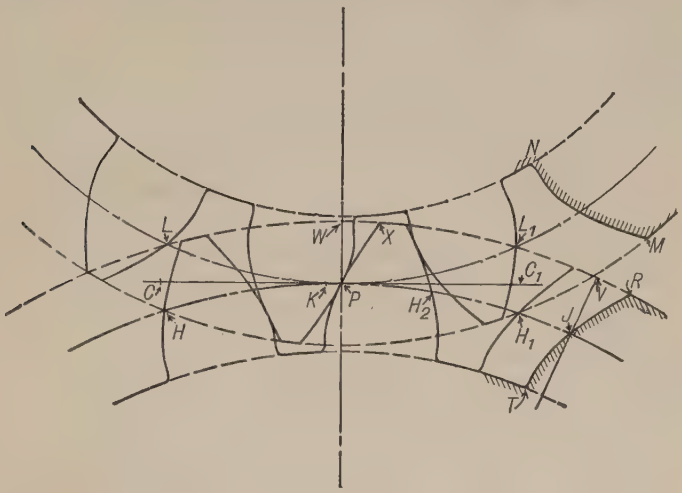

Fig. 9–8

Let MN and RT be the known tooth outlines for the gears A and B respectively. To draw three teeth on each gear, one pair of which shall be in contact at the pitch point. Draw the addendum circle of each with radius equal to radius of pitch circle plus addendum. Draw root circle of each with radius equal to radius of pitch circle minus an amount equal to the addendum of other gear plus clearance. Space off the circular pitch on either side of P on each pitch circle. This may be conveniently done by drawing a line tangent to the pitch circles at P, laying off the circular pitch PC and PC_1 on this line. Set the dividers at some small distance such that when spaced on the pitch circles the length of arc and chord will be nearly the same. Start at C, step back on CP until the point of the dividers comes nearly to P (say at K) then step back on the pitch circles the same number of spaces, getting H and L. H_1 and L_1 can be found in the same manner.

Through the point J, where the curve RT cuts the pitch circle of B,

draw the radial line cutting the addendum circle at V. Make arc WX equal to arc VR. Cut a templet or find a place on a French curve which fits the curve RJT, mark it, and transfer the curve to pass through X and P. Make PH_2 equal to one half PH_1, minus one half the backlash, turn the curve over and draw curve through H_2 in the same way that PX was drawn. All the other curves may be drawn in a similar way.

9–22. Clearing Curve. If the flanks are extended until they join the root line, a very weak tooth will often result; to avoid this, a **fillet** is used which is limited by the arc of a circle connecting the root line with the flank, and lying outside the actual path of the end of the face of the other wheel. This actual path of the end of the face is called the **true clearing curve.**

This curve is the **epitrochoid** traced by the outermost corner of one tooth on the plane of the other gear. The general method of drawing

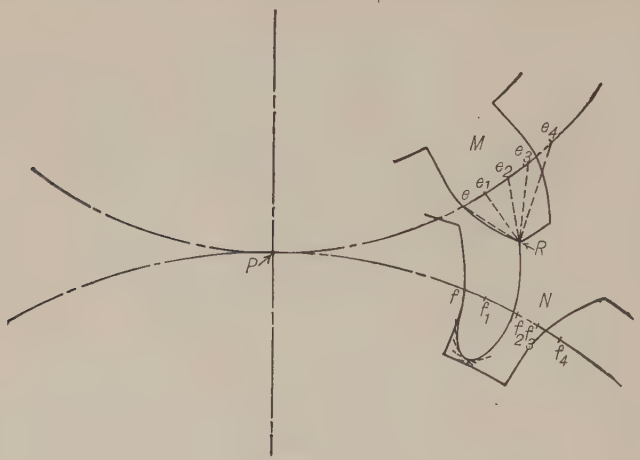

FIG. 9–9

such a curve is shown in Fig. 9–9. The tooth M is to work in the space N. From e lay off the equal arcs ee_1, e_1e_2, e_2e_3, etc., and from f lay off the same distances ff_1, f_1f_2, etc. From f, f_1, f_2, etc., draw arcs with the radii eR, e_1R, e_2R, etc., respectively. A smooth curve internally tangent to all these curves will be the desired epitrochoid or clearing curve.

9–23. The Involute of a Circle. The form of the curve most commonly given to gear teeth is that known as the involute of a circle. Teeth properly constructed with this curve will conform to the law described in § 9–18 as will appear in the following paragraphs. This curve and the method of drawing it will, therefore, be studied before considering the method of applying it to gear teeth.

In Fig. 9–10 the circle represents the end view of a cylinder around which is wrapped an inextensible fine thread, fastened to the cylinder at A and having a pencil in a loop at P. If now the pencil is swung out so as to unwind the thread from the cylinder, keeping it always taut, the curve which the pencil traces on a piece of paper on which the cylinder rests is known as an involute of the circle which represents the end view of the cylinder. The same result is obtained by considering the tracing point to be carried by a line rolling on a circle. All involutes drawn from the same circle are alike, but involutes drawn from circles of different diameters are different. The greater the diameter of the circle the flatter will be its involute.

In constructing the involute of a circle on the drawing board it is, of course, impossible actually to wrap a thread around the circle and

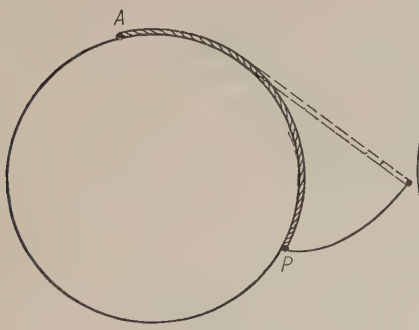

Fig. 9–10

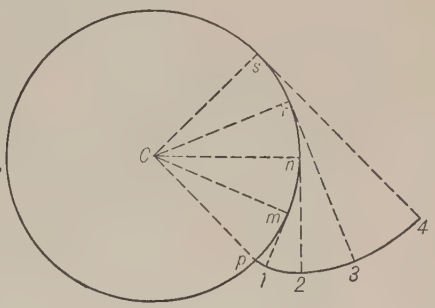

Fig. 9–11

draw the involute by unwinding the thread. Fig. 9–11 shows the method of constructing an involute on the drawing board. Suppose that the involute is to be drawn starting from any point p on the circle whose center is C. Set the dividers at any convenient short spacing; a distance which is about one-eighth the diameter of the circle will give good results. Place one of the points of the dividers at p and space along on the circumference a few times, getting the equidistant points m, n, r, s. At each of these points draw radial lines and construct lines perpendicular to these radii as shown. Each of these perpendiculars will then be tangent to the circle at one of the points. Taking care that the setting of the dividers remains unchanged, lay off one space $m1$ on the tangent at m. On the next line, which is tangent at n, lay off from n the same distance twice, getting the point 2. From r lay off the distance three times, getting the point 3; and so on until points are found as far out as desired. A smooth curve drawn through these points with a French curve will be a very close approximation to the

true involute — close enough for all practical purposes if the work is done carefully.

9–24. Application of the Involute to Gears. In Fig. 9–12 let A and B be the centers of two gears whose pitch circles are tangent at P. Through P draw a line XX perpendicular to the line of centers AB and another line YY making an angle θ with XX. From A draw a line Aa perpen-

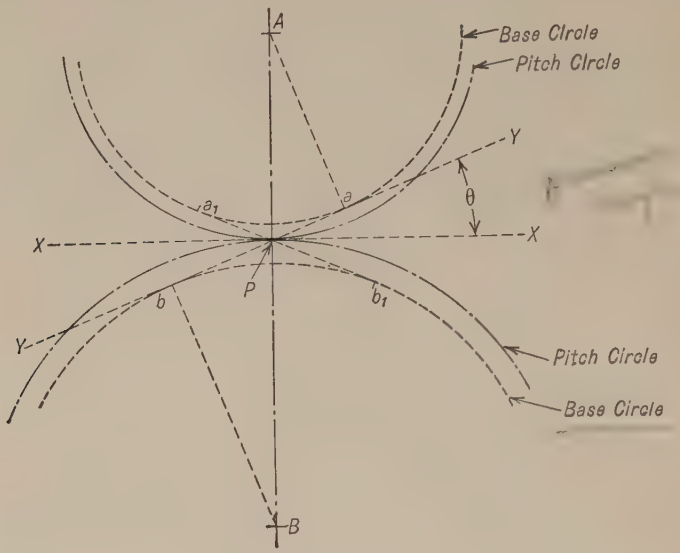

Fig. 9–12

dicular to YY, and from B draw Bb also perpendicular to YY. Then Aa and Bb will be the radii of circles drawn from A and B respectively, tangent to YY. These circles are called base circles. The triangle AaP is similar to the triangle BbP; therefore, $\dfrac{Aa}{AP} = \dfrac{Bb}{BP}$. That is, the radii of the base circles are in the same ratio as the radii of the pitch circles. Therefore, since

$$\frac{\text{Angular speed of } A}{\text{Angular speed of } B} = \frac{BP}{AP}$$

it follows that

$$\frac{\text{Angular speed of } A}{\text{Angular speed of } B} = \frac{Bb}{Aa}$$

If now the tooth outlines on the gear A are made involutes of the circle whose radius is Aa and those on B involutes of the circle whose

radius is Bb, a tooth on A will drive a tooth on B in such a way that at all times the angular speed of A will be to the angular speed of B as Bb is to Aa, the action being the same as if the lines ab and a_1b_1 were inextensible cords connecting the base circles and the involutes were curves traced by marking points on the cords. The same ratio of speeds would hold if B were the driver. The teeth would always be in contact at a point on the line aPb or at a point on a_1Pb_1. *The path of contact in gears having involute teeth is, therefore, a straight line, and the angle of obliquity or pressure angle is constant.* That is, neglecting friction, the direction of the force which the driving tooth exerts on the driven tooth is the same at all times.

9–25. To Draw a Pair of Involute Gears. Suppose that it is required to draw a pair of involute gears 4-pitch, 16 teeth in the driver and 12 teeth in the driven gear; addendum on each to be $\frac{1}{4}$ in. and dedendum $\frac{9}{32}$ in.; pressure angle $\theta = 22\frac{1}{2}°$.

In Fig. 9–13 draw a center line and on this line choose a point S which is to be the center of the driving gear. To find the distance between centers and thus locate the center of the other gear, first find the pitch diameter of each. Since the driver has 16 teeth and is 4-pitch (that is, it has 4 teeth for every inch of pitch diameter), its pitch diameter must be $16 \div 4$ or 4 in. In like manner the diameter of the other gear is $12 \div 4$ or 3 in. The distance between centers must be equal to the radius of the driver plus the radius of the driven gear and is, therefore, $2 + 1\frac{1}{2}$ in. or $3\frac{1}{2}$ in. Measure off the distance SS_1 equal to $3\frac{1}{2}$ in. and S_1 is the center of the driven gear. Next, locate the pitch point P, 2 in. from S or $1\frac{1}{2}$ in. from S_1, and through P draw arcs of circles with S and S_1 as centers. These arcs are parts of the pitch circles of the two gears. Through P draw the line XX perpendicular to the line of centers and draw the line YY making an angle of $22\frac{1}{2}°$ with XX. From S and S_1 draw lines perpendicular to YY meeting it at a and b. With radii Sa and S_1b draw the base circles. Draw the addendum circle of the upper gear with S as a center and radius equal to the radius of the pitch circle plus the addendum distance. This will be $2\frac{1}{4}$ in. In similar manner draw the addendum circle of the lower gear with a radius $1\frac{3}{4}$ in. Draw the root circle of the upper gear with S as a center and radius $2 - \frac{9}{32}$ in. (that is pitch radius − dedendum). Find the root circle of the lower gear in a similar way. We are now ready to construct the teeth.

From the point a space off on the base circle the arc at equal in length to the line aP and from t, thus found, draw the involute of the base circle of the upper gear as described for Fig. 9–11. tPk is the curve thus found. In a similar manner find the point r such that arc br is equal in length to the line bP and from r draw the involute rPn of the lower base circle.

The shape of the tooth curves having been found in this way, the next step is to find the width of the teeth on the pitch circles and draw in the remaining curves. Since the gears are 4-pitch, the circular pitch is $\frac{1}{4} \times 3.1416 = 0.7854$ in., and if the width of the tooth is one-half the circular pitch, as is usual, neglecting backlash the width of the tooth on each gear must be $\frac{1}{2} \times 0.7854$ or 0.39 in. nearly. Therefore, lay off the arc PR equal to 0.39 in. and through R draw an involute which is a duplicate of the curve tPk except that it is turned in the reverse direc-

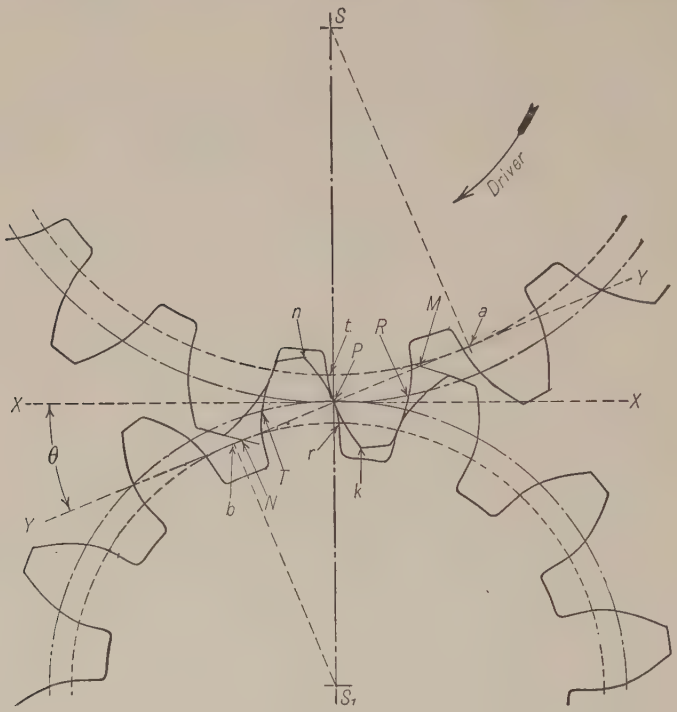

Fig. 9–13

tion. Similarly make PT equal 0.39 and draw an involute through T which is a duplicate of the curve nPr. These curves can be transferred to the new positions by means of templets, it being unnecessary to construct the curve more than once. The tooth outlines below the base circles may be made radial lines with small fillets at the bottom corners. One tooth on each gear has now been completed and other teeth may be drawn like these by means of templets.

If the larger gear is the driver and turns in the direction indicated by the arrow, tooth contact begins at the point M when the addendum

circle of the driven gear cuts the line of action YY and ends at the point N where the addendum circle of the driver cuts the line of action. The path of contact is the line MPN.

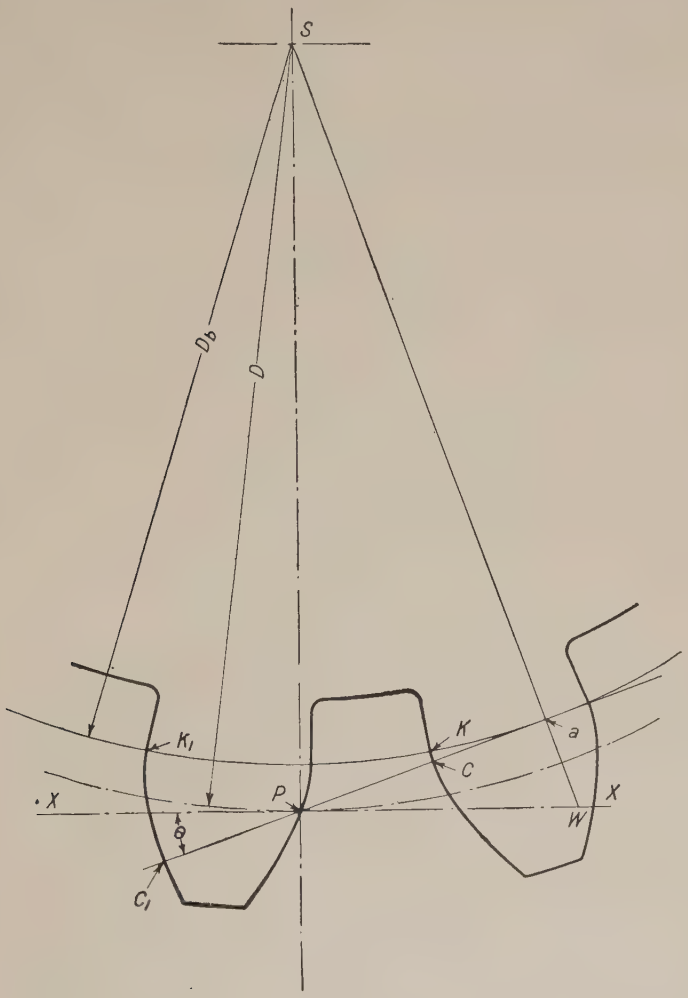

Fig. 9–14

9–26. Normal Pitch. The normal pitch is the distance from one tooth to the corresponding side of the next tooth, measured on the common normal (CC_1, Fig. 9–14). From the method of generating the curves this distance is constant and is equal to the distance between the corresponding sides of two adjacent teeth measured on the base circle (arc KK_1, Fig. 9–14).

The definite quantities in a given involute gear are the base circle and the normal pitch.

9–27. Relation between Normal Pitch and Circular Pitch. Referring to Fig. 9–14, let D represent the diameter of the pitch circle and D_b the diameter of the base circle. N = normal pitch, C = circular pitch, T the number of teeth, a the point where the line of obliquity (or generating line) is tangent to the base circle, and θ the pressure angle. Draw Sa and produce it to meet XX (the tangent to the pitch circle through P) at W. Angle aSP = angle aPW = θ, and the triangles aPW and aSP, are similar.

Therefore, $$\frac{aS}{SP} = \cos\theta$$

From the definition of normal pitch (§ 9–26)

$$N = \frac{\pi D_b}{T}$$

and from equation (1)

$$C = \frac{\pi D}{T}$$

Therefore $$\frac{N}{C} = \frac{D_b}{D} = \cos\theta \qquad (5)$$

That is, *the normal pitch is equal to the circular pitch multiplied by the cosine of the pressure angle.*

9–28. Relation between Length of Path of Contact and Length of Arc of Contact. In Fig. 9–15 the teeth shown in full lines are in contact at the beginning of the path of contact and the teeth shown dotted are at the end of the path of contact and at the pitch point. Contact begins at T, where the addendum circle of the driven gear cuts the line of action, and ends at T_1 where the addendum circle of the driver cuts the line of action. During approaching action contact takes place along the line TP while the point N is moving to the position P. The arc NP is therefore the *arc of approach.* During recess the same point N has moved from the position P to M. The arc PM is therefore the *arc of recess,* and NPM is the *arc of action.* The angle α subtending the arc of approach is the *angle of approach* for the driven gear; β is the *angle of recess,* and ϕ is the *angle of action* for the driven gear.

From equation (5) we have

$$\frac{\text{Radius base circle}}{\text{Radius pitch circle}} = \cos\theta$$

Therefore $$\frac{\text{arc } LK}{\text{arc } NM} = \cos\theta$$

But from the properties of the involute, considering the line *ab* as the connecting line between the two revolving base circles, the length

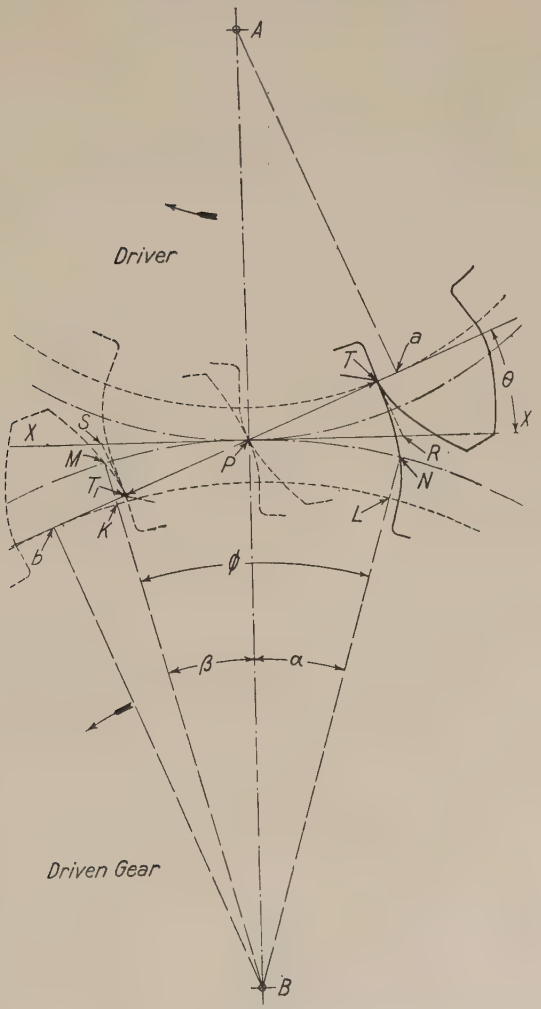

Fig. 9–15

of the line TT_1 (that is, the path of contact) is equal to the length of the arc LK.

Therefore $$\frac{TT_1}{\text{arc } NM} = \cos\theta \qquad (6)$$

Whence, *the path of contact is to the arc of action as the cosine of the pressure angle.*

Also, *the path of contact in approach is to the arc of approach as the cosine of the pressure angle.*

A convenient method for determining the arcs and angles of action graphically is as follows: Draw XX tangent to the pitch circle at P. From T and T_1 draw TR and T_1S perpendicular to TT_1 meeting XX at R and S. The length RP is then equal to the length of the arc of approach, PS the arc of recess, and RS the arc of action. Laying off the distances PR and PS on the pitch circle gives PN and PM the arcs of approach and recess respectively, and NPM the arc of action. Joining N and M to the center B of the driven wheel gives α and β, the angles of approach and of recess, and ϕ the angle of action.

Conversely, if the lengths of the arcs of approach and recess are known, the ends of the paths of contact may be found by laying off the lengths of the arcs along XX and drawing perpendiculars to ab. Through the points T and T_1 thus found the addendum circles may be drawn.

9–29. Limits of Addendum on Involute Gears. Fig. 9–15 shows one tooth on each of a pair of 4-pitch gears of 18 and 24 teeth respectively. The addendum arcs of the teeth are such that the addendum distance is equal to 0.875 ÷ diametral pitch. If for any reason it is desired to redesign these gears with longer teeth, that is, with larger addendum circles, it will be necessary to know how long the teeth can be made without causing trouble. The tooth on B can be increased in length until the addendum circle passes through the point a, where the line of obliquity YY is tangent to the base circle of A. If the tooth is made longer than this limit, interference will result unless some special form of curve is constructed in place of the involute for the outer end of the tooth.

At the right of Fig. 9–16 are shown the same pair of teeth with the addendum of gear B lengthened so that the addendum circle is outside of point a. It will be noticed that the extended face of the tooth of B cuts into the radial extension of the flank of the tooth on A and also cuts slightly into that part of the tooth outside the base circle.

Referring still to Fig. 9–16, the tooth on A might be lengthened until the addendum circle passed through the point of tangency b except for the fact that there is another limit to the addendum which sometimes has to be considered. The maximum addendum here is limited by the intersection of the two sides of the tooth giving a pointed tooth. It is evident that no further increase in addendum is here possible.

The following illustration will help to make the above statements clear.

In Fig. 9–17 let it be required to determine if the arc of recess can be equal to $\frac{3}{4}$ of the circular pitch. Lay off from a on the tangent the distance $ab = \frac{3}{4}$ of the circular pitch. Draw bc perpendicular to the

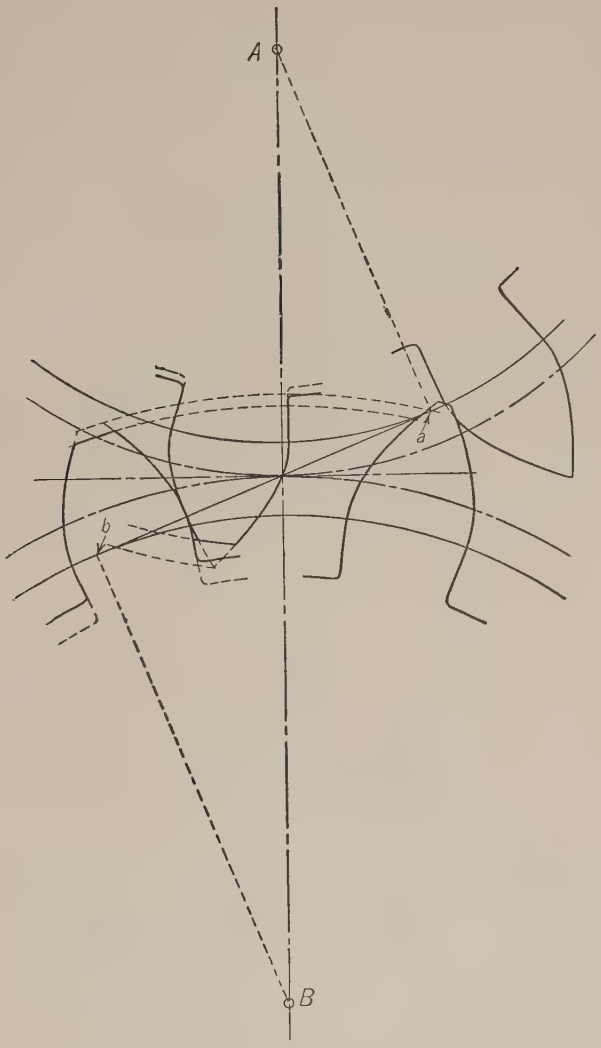

Fig. 9–16

line of obliquity; c will be the end of the path of contact for the given arc of recess. If the point c came beyond d, the tangent point of the line of obliquity and the base circle, the action would be impossible since no contact can occur beyond d. But if, as in Fig. 9–17, the point c comes

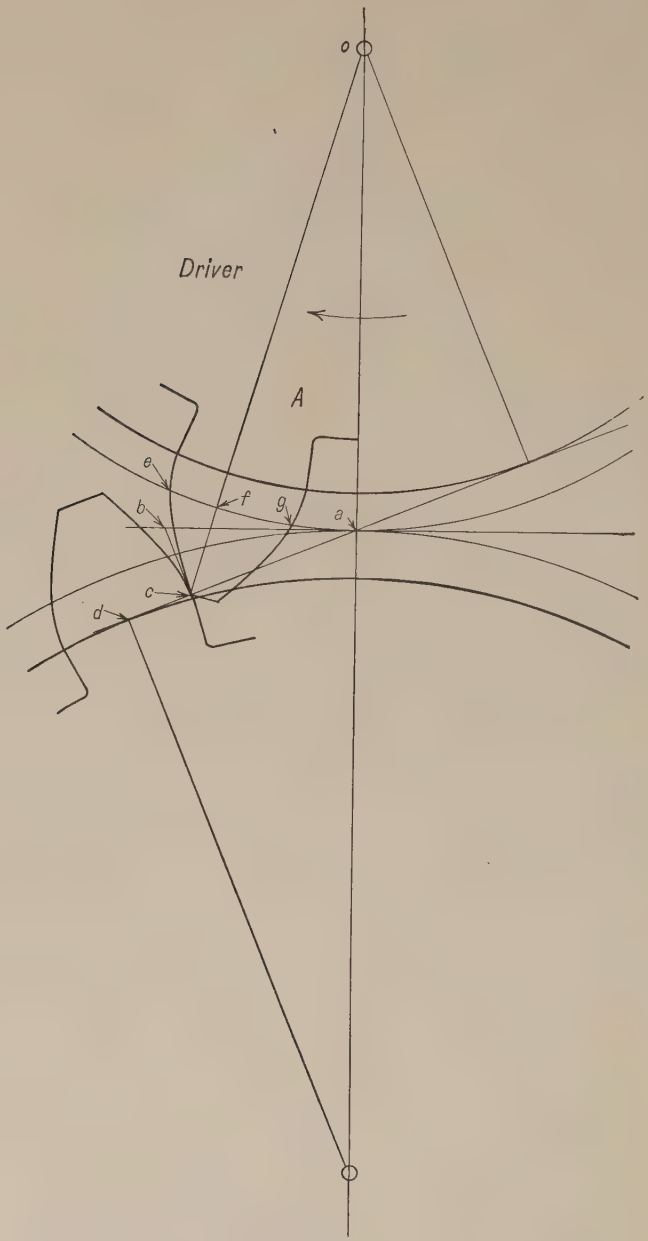

FIG. 9–17

between a and d, it is necessary to determine if the face of the tooth on A can reach to c. Lay off on the pitch circle A the arc $ae = ab = \frac{3}{4}$ of the pitch; the face of the tooth on A will then pass through c and e. Draw the line co from c to the center of A, and note the point f where it cuts the pitch circle A. If ef is less than one-half the thickness of the tooth, the action can go as far as c and the teeth will not be pointed. In the figure, assuming tooth and space equal, the thickness of the tooth would be eg, and ef is less than $\frac{1}{2}\ eg$; therefore the action is possible, as is shown by the two teeth drawn in contact at c.

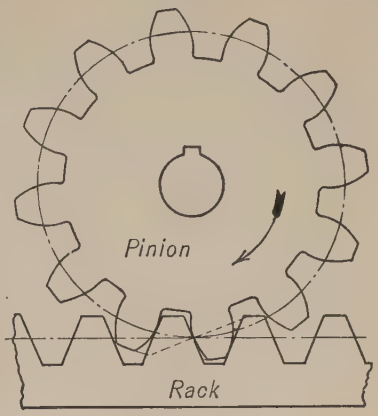

Fig. 9–18

9–30. Pinion and Rack. Fig. 9–18 is a drawing of a pinion and rack in mesh. No new principle is involved since the rack is merely a spur gear the radius of whose pitch circle has become infinite.

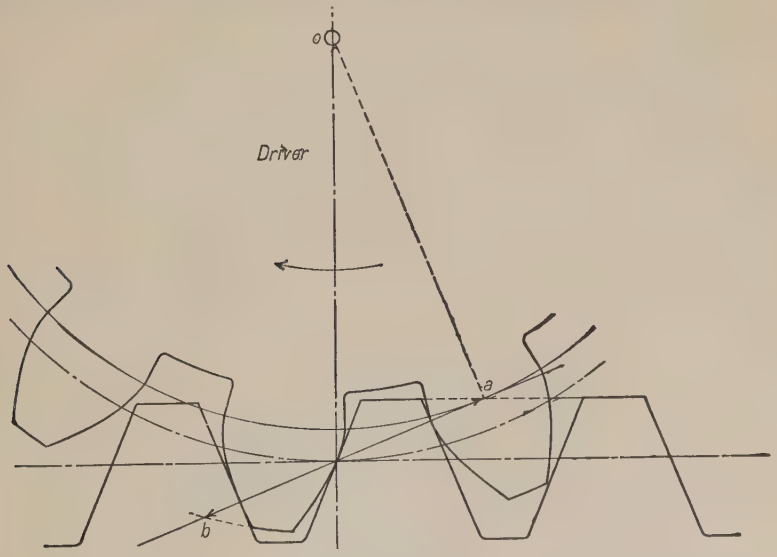

Fig. 9–19

9–31. Involute Pinion and Rack. Fig. 9–19 shows a pinion driving a rack. The path of contact cannot begin before the point a, but the recess is not limited excepting by the addendum of the pinion, since the base line of the rack is tangent to the line of obliquity at infinity.

For the same reason it will be evident that the sides of the teeth of the rack will be *straight lines* perpendicular to the line of obliquity. In the figure the addendum on the rack is made as much as the pinion will allow, that is, so that the path of contact will begin at a. The addendum of the pinion will give the end of the path of contact at b.

In Fig. 9–20, the diagram for a pinion and a rack, let it be required to determine if the path of contact can begin at a and go as far as b; to be solved without using the tooth curves. For the contact to begin

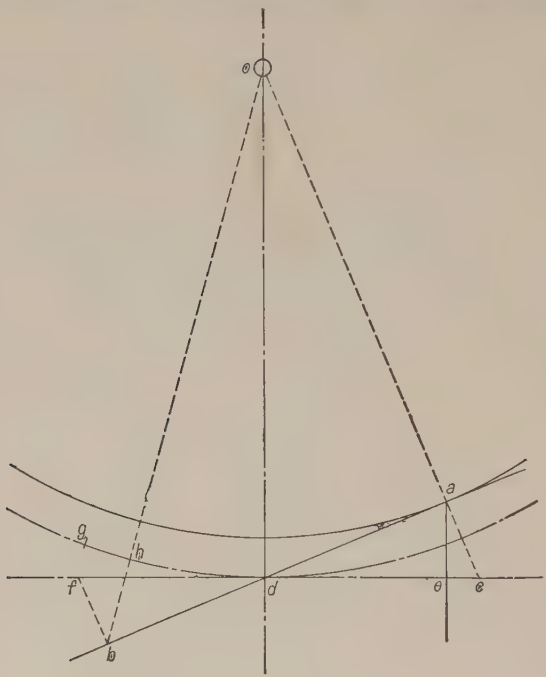

Fig. 9–20

at a the face of the rack must reach to a. Draw the line ac perpendicular to the line of obliquity, giving cd as the arc of approach; draw ae parallel to the line of centers, and if ce is less than one-half the thickness of the rack tooth, the approaching action is possible without pointed teeth. Similarly for the recess, draw the line bf perpendicular to the line of obliquity, giving df equal to the arc of recess; make the arc dg on the pinion's pitch circle equal to df, then the face of the pinion's tooth will pass through b and g; draw the line bh to the center of the pinion, and note the point h where it crosses the pinion's pitch circle. If gh is less than one-half the thickness of the tooth, the recess is possible without pointed teeth.

9–32. Annular Wheel and Pinion. In Fig. 9–21 a perspective view is given of an annular wheel with a small pinion in mesh with it. In § 9–30 mention was made of the fact that a rack and pinion in mesh may be thought of as being derived from a pair of external spur gears

FIG. 9–21

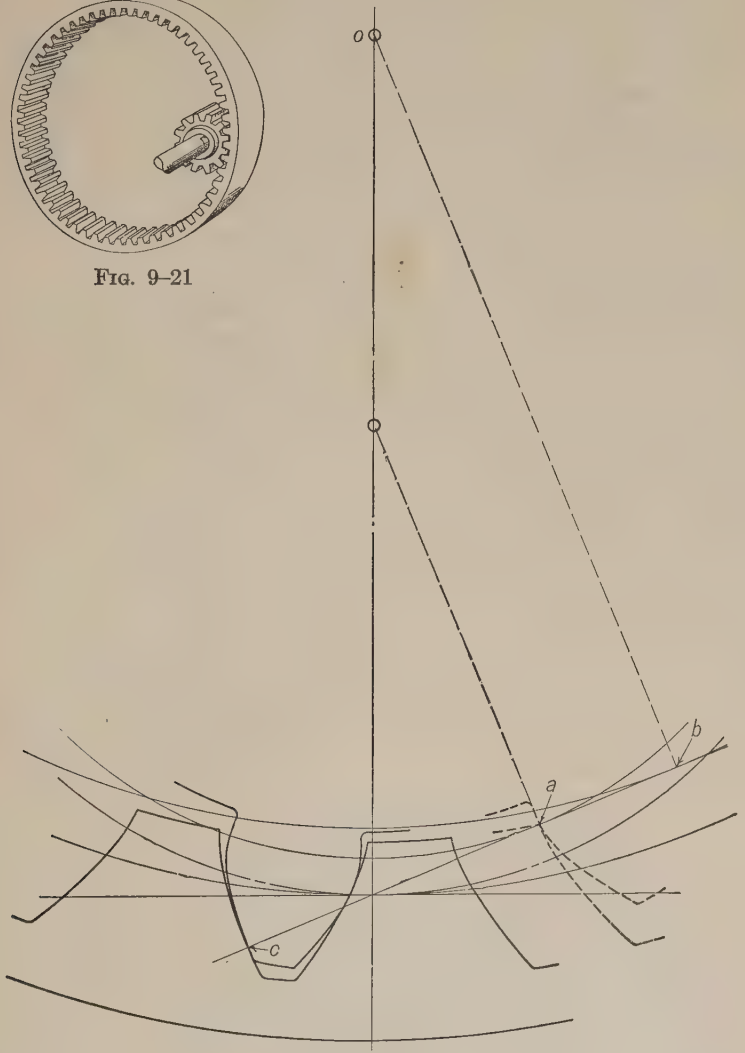

FIG. 9–22

(with pitch point between their axes) by increasing the pitch radius of one gear until it becomes infinite. A further change of the radius in the same direction makes it a finite quantity negative with respect to

its original direction. That is, both axes will lie on the same side of the pitch point, giving internal contact.

9–33. Involute Pinion and Annular Wheel. Fig. 9–22 shows an involute pinion driving an annular wheel. This is very similar to a pinion and rack. The addendum of the annular is limited by the tangent point *a* of the pinion's base circle and the line of obliquity, while the addendum of the pinion is unlimited except by the teeth becoming pointed. The base circle of the annular lies inside the annular, so that its point of tangency with the line of obliquity is at *b*. If we take some point on the line of obliquity, as *c*, and roll the tooth curves as they would appear in contact at that point, the teeth of the annular will be found to be *concave*, and the addendum of the annular would seem to be limited by the base circle of the annular where the curves end. But if these two teeth are moved back until they are in contact at *a*, it will be evident that the annular's tooth curve cannot be extended beyond *a*

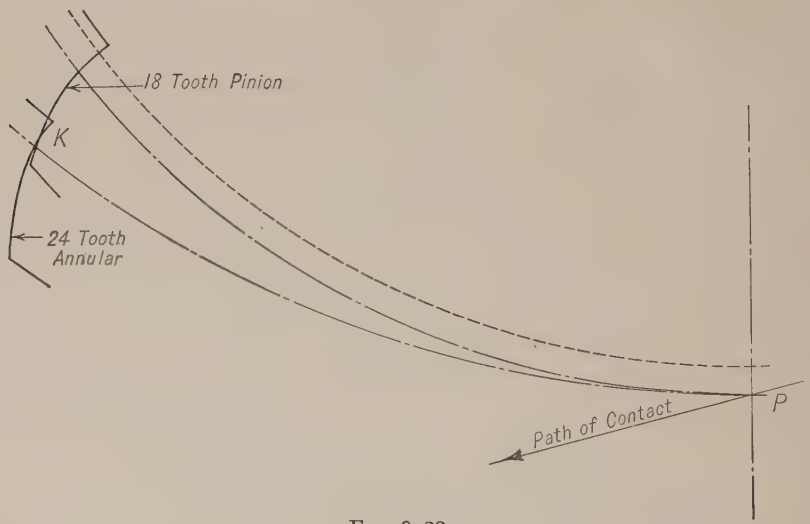

Fig. 9–23

without interfering with the pinion teeth as in the case of the spur gear. Therefore the addendum of the annular is limited by the point of tangency of the base circle of the pinion and the line of obliquity.

If the ratio of the number of teeth in the pinion to the number of teeth in the annular exceeds a certain limit, interference will occur between the teeth after they have ceased contact along the path of contact. This is illustrated in Fig. 9–23, where an 18-tooth pinion is shown with a 24-tooth annular of $14\frac{1}{2}°$ pressure angle. Their teeth are shown interfering at *K*.

The limiting size of the pinion at which this interference begins to be evident is a function of the pressure angle and of the addendum of the annular. The mathematical work for determining the theoretically largest pinion to run with a given annular is very complicated, and hardly worth while. If occasion arises to test any given case it may readily be done by drawing the teeth as in Fig. 9–23.*

9–34. Possibility of Separating Two Involute Wheels. Interchangeable Gears. One of the most important features of involute gearing is the fact that two such wheels may be *separated*, within limits, without destroying the accuracy of the angular speed ratio. In this way the backlash may be adjusted, since the original pitch circles need not be in contact. To show that this is so, the gears shown in Fig. 9–24 may be redrawn using the same pitch circles and base circles, but separating them slightly, keeping the teeth in contact, as has been done in Fig. 9–25. Connect the base circles by the tangent *bc*. If now the line *bc*, Fig. 9–25, carries a marking point, it will evidently trace the involutes of the two base circles, as *de* and *he*, and these curves must be the same as the tooth curves in Fig. 9–24. In Fig. 9–25 these curves *de* and *he* will give an angular speed ratio to the base circles inversely as their radii, but the radii of these base circles are directly as the radii of the original pitch circles (Fig. 9–24); hence in Fig. 9–25 the tooth curves *de* and *he* would give an angular speed ratio to the two wheels inversely as the radii of the original pitch circles, although these circles do not touch. The path of contact is now from *k* to *e*, which is considerably shorter than in Fig. 9–24; it is, however, slightly more than the normal pitch, so that the action is still sufficient. *The limit of the separation will be when the path of contact is just equal to the normal pitch.* The pressure angle is *bam*, which is greater than in Fig. 9–24. The backlash has also increased.

The wheels have new pitch circles in contact at *a*, and a new angle of obliquity or pressure angle, also a greater circular pitch with a certain amount of backlash; and if these latter data had been chosen at first the result would have been exactly the same wheels as in Fig. 9–24, slightly separated. It will be seen that the radii of the new pitch circles are to each other as the radii of the respective base circles, and consequently as the respective original pitch circles. It will also be seen that the line of obliquity, which is the common normal to the tooth curves, passes through the new pitch point *a* so that the fundamental law of gearing is still fulfilled.

By the application of the preceding principles two or more wheels of

* A simple graphical construction for testing any proposed case without drawing the tooth curves is given by Professor Heck in his "Mechanics of Machinery."

different numbers of teeth, turning about one axis, can be made to gear correctly with one wheel or one rack; or two or more parallel racks with

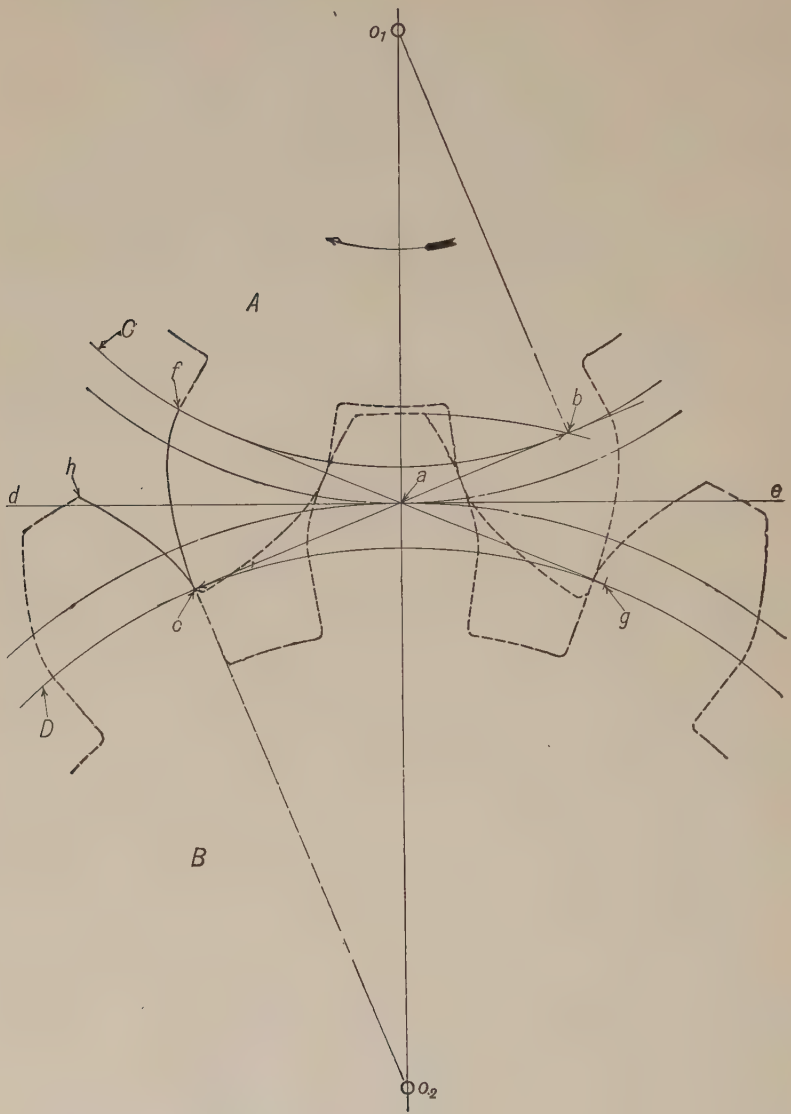

Fig. 9–24

different obliquities of action can be made to gear correctly with one wheel, the normal pitches in each case being the same. Thus differential

movements can be obtained which are not possible with teeth of any other form.

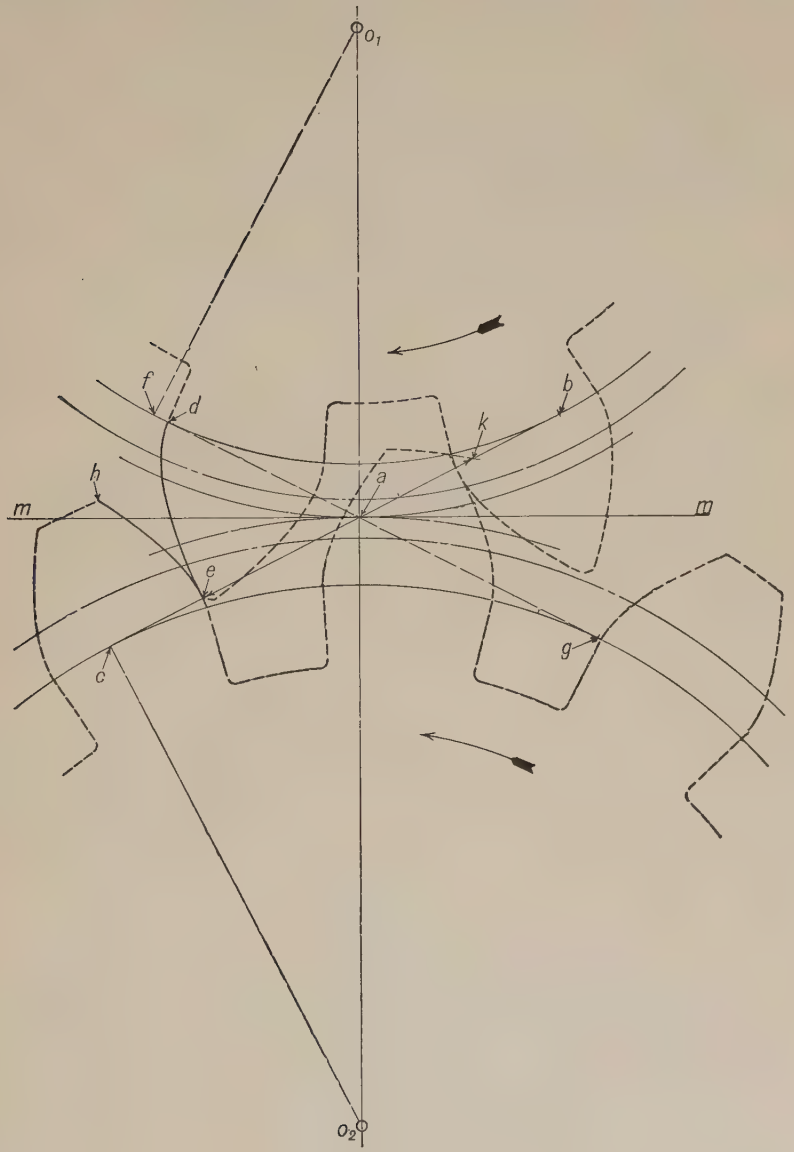

FIG. 9–25

In this same connection, attention may be called to the fact that in a set of involute gears which are to be interchangeable the normal pitch must be the same in all.

9–35. Standard Proportions for Involute Gears. While gear teeth may be constructed having any proportions provided they conform to the principles already discussed, and, for special purposes, are often so constructed, yet it is desirable that there be some standard relation between addendum, dedendum, and pitch. The following table gives the standard proportions for involute gears, with the pressure angles ordinarily used, proposed by the *American Society of Mechanical Engineers* and the *American Gear Manufacturers Association* and approved by the *American Engineering Standards Committee.*

A.E.S.C. STANDARD FOR INVOLUTE GEARS

Pressure Angle	$14\frac{1}{2}°$	20° (stub)
Addendum	$\frac{1}{\text{Diametral pitch}}$	$\frac{0.8}{\text{Diametral pitch}}$
Clearance	$\frac{0.157}{\text{Diametral pitch}}$	$\frac{0.2}{\text{Diametral pitch}}$
Dedendum	$\frac{1.157}{\text{Diametral pitch}}$	$\frac{1}{\text{Diametral pitch}}$
Outside diameter	$\frac{\text{Number of teeth} + 2}{\text{Diametral pitch}}$	$\frac{\text{Number of teeth} + 1.6}{\text{Diametral pitch}}$

9–36. Cycloidal Gears. Formerly, gear teeth were constructed on the cycloidal system. The faces of the teeth were epicycloids generated on the pitch circles and the flanks hypocycloids generated inside the pitch circles. The involute system has replaced the cycloidal almost entirely for general purposes, although cycloidal teeth are still used in some special cases.

In Fig. 9–26 let o_1 and o_2 be the centers of the two wheels A and B, their pitch circles being in contact at the point a. Let the smaller circles C and D, with centers at p_1 and p_2, be placed so that they are tangent to the pitch circles at a. Assume the centers of these four circles to be fixed and that they turn in rolling contact; then if the point a on the circle A moves to a_1, a_2, a_3, the same point on B will move to b_1, b_2, b_3, and on C to c_1, c_2, c_3. Now if the point a on the circle C carries a marking point, in its motion to c_1 it will have traced from the circle A the hypocycloid a_1c_1, and at the same time from the circle B the epicycloid b_1c_1. This can be seen to be true if the circles A and B are now fixed; and if C rolls in A, the point c_1 will roll to a_1, tracing the hypocycloid c_1a_1; while if C rolls on B, c_1 will trace the epicycloid c_1b_1. These two curves

in contact at c_1 fulfil the fundamental law for tooth curves, that the normal to the two curves at the point c_1 must pass through a. Similarly, if the original motion of the circles had been to a_2, b_2, c_2, the same curves would be generated, only they would be longer and in contact at c_2. If the hypocycloid c_2a_2 is taken for the flank of a tooth on A, and

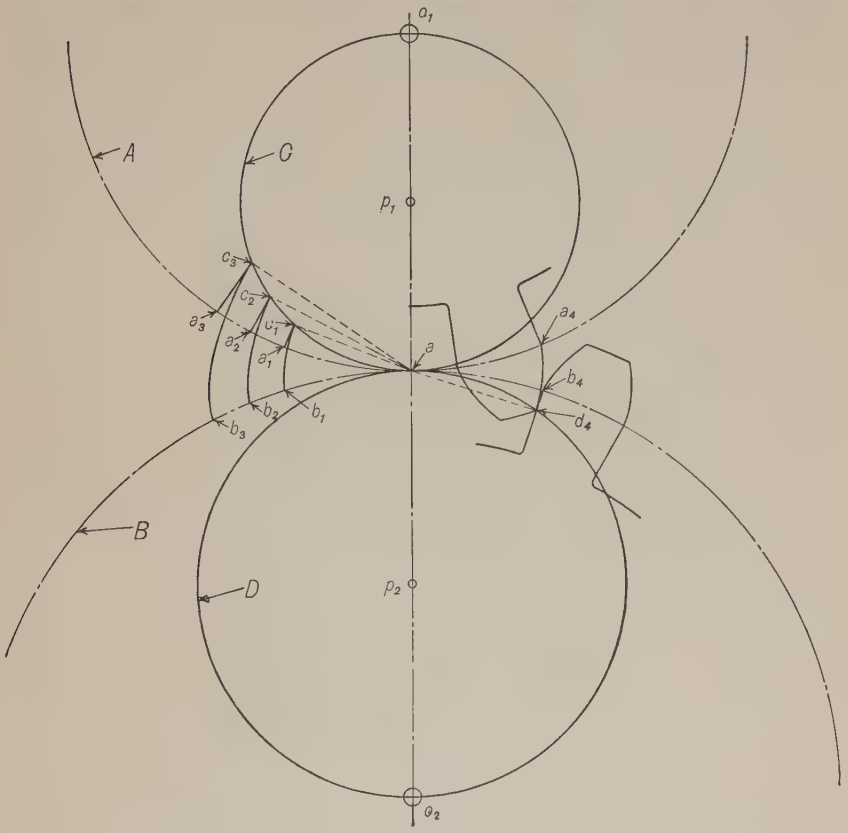

Fig. 9–26

the epicycloid c_2b_2 for the face of a tooth on B, and if c_2a_2 drives c_2b_2 toward a, it is evident that these two curves by their sliding action, as they approach the line of centers, will give the same type of motion to the circles as the circles had in generating the curves, which was pure rolling contact. Therefore the two cycloidal curves rolled simultaneously by the describing circle C will cause by their sliding contact the same angular speed ratio of A and B as would be obtained by A and B moving with pure rolling contact.

If now the circles A, B, and D are rolled in the *opposite* direction to

that taken for A, B, and C, and if the point a moves to a_4, b_4, and d_4 on the respective circles, the point a on D while moving to d_4 will trace from A the epicycloid a_4d_4, and from B the hypocycloid b_4d_4. The curve a_4d_4 may be the face of a tooth on A, and b_4d_4 the flank of a tooth on B, the normal d_4a to the two curves in contact at d_4 passing through a. The flank and face for the teeth on A and B, respectively, which were previously found, have been added to the face and flank just found, giving the complete outlines, in contact at d_4.

If now the wheel B is turned L.H., the tooth shown on it will drive the tooth on A, giving a constant angular speed ratio between A and B until the face of the tooth on B has come to the end of its action with the flank which it is driving, at about the point c_2.

The following facts will be evident from the foregoing discussion: in the cycloidal system of gearing, *the flank and face which are to act upon each other must be generated by the same describing circle*, but the describing circles for the face and flank of the teeth of one wheel need not be alike. *The path of contact is always on the describing circles;* in Fig. 9–26 it is along the line d_4ac_1.

9–37. Interchangeable Cycloidal Wheels. A set of wheels any two of which will gear together are called interchangeable wheels. For these the same describing circle must be used in generating all the faces and flanks. The size of the describing circle depends on the properties of

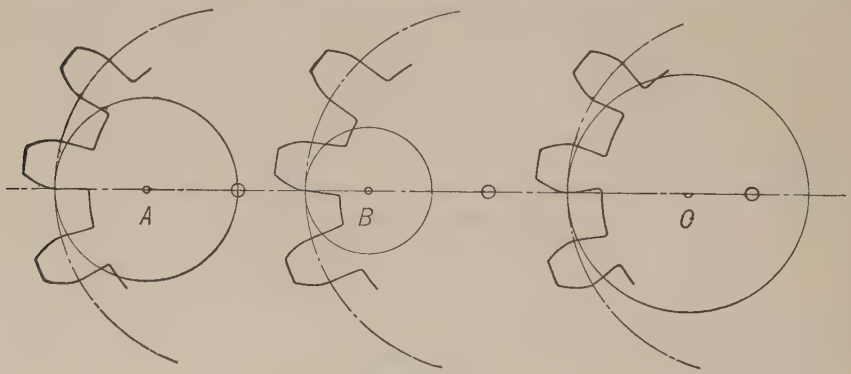

Fig. 9–27

the hypocycloid, which curve forms the flanks of the teeth (excepting in an annular wheel). If the diameter of the describing circle is half that of the pitch circle, the flanks will be radial (Fig. 9–27, A), which gives a comparatively weak tooth at the root. If the describing circle is made smaller, the hypocycloid curves away from the radius (Fig. 9–27B), and will give a strong form of tooth; but if the describing circle is larger, the hypocycloid will curve the other way, passing inside the

radial lines (Fig. 9–27, *C*) and giving a still weaker form of tooth, and a form of tooth which may be impossible to shape with a milling cutter.

From the above the practical conclusion would appear to be that the diameter of the describing circle should not be more than one-half that of the pitch circle of the smallest wheel of the set. It will be found, however, that when the diameter of the describing circle is taken five-eighths the diameter of the pitch circle, the curvature of the flanks will not be so great, with the ordinary proportions of height to thickness of teeth, but that the spaces are narrowest at the bottom; this being so, the teeth can be shaped by a milling cutter.

Sometimes the diameter of the describing circle is taken such that it gave radial flanks on a 15-tooth pinion, or five-eighths that of a 12-tooth pinion, the smallest wheel of the set.

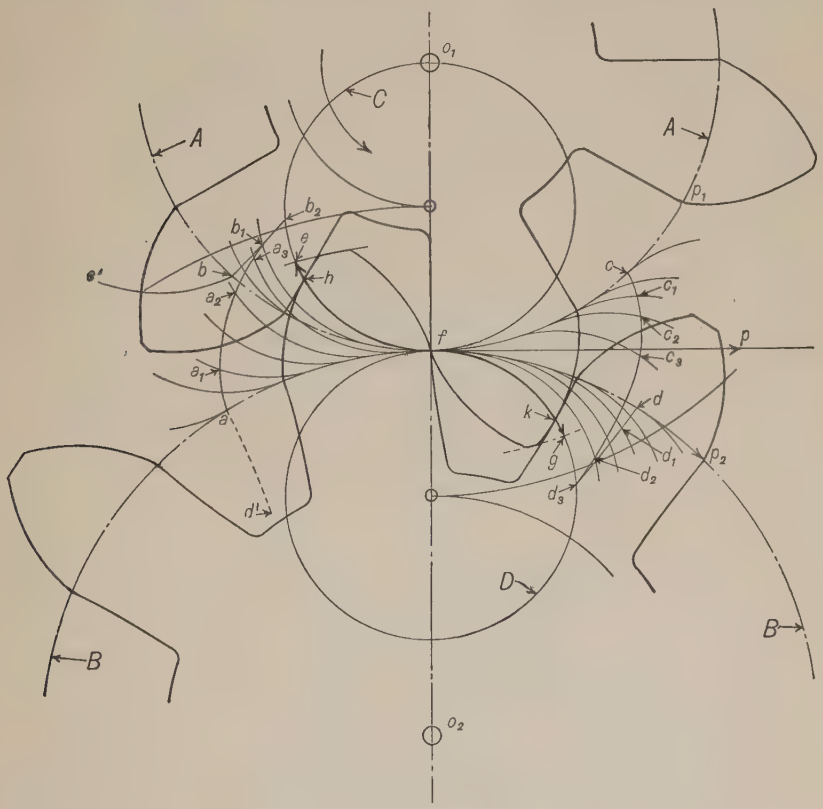

Fig. 9–28

9–38. To Draw the Teeth for a Pair of Cycloidal Wheels, and to Determine the Path of Contact. In Fig. 9–28, given the pitch circles

A and B and the describing circles C and D, C to roll the faces for B and the flanks for A, while D is to roll the faces for A and the flanks for B. These curves may be rolled at any convenient place. In the figure, the wheel A is to be the driver and is to turn as shown. Choose any point, as b, on A and a point a on B at a distance from the pitch point $af = bf$. The epicycloid and hypocycloid rolled from a and b respectively, and shown in contact at b_2, would be suitable for the faces of the teeth on B and the flanks of the teeth on A respectively, and could be in action during approach. The curves may be rolled as indicated by the light lines.

9–39. Annular Wheels. Fig. 9–29 shows a pinion A driving an annular wheel B, the describing circle C generating the flanks of A, and the faces of B, which in an annular wheel lie inside the pitch circle, while D generates the faces of A and the flanks of B. The describing circle C is called the *interior describing circle*, and D is called the *exterior describing circle*. The method of rolling the tooth curves, and the action of the teeth, are the same as with two external wheels, the path of contact being in this case *efg* when the pinion turns R.H. If these wheels were of an interchangeable set, the describing circles would be alike, and the annular would then gear with any wheel of the set excepting for a limitation which is discussed in the following paragraph.

9–40. Limitation in the Use of an Annular Wheel of the Cycloidal System. Referring to Fig. 9–29, it will be evident that, if the pinion drives, the *faces* of the pinion and annular will tend to be rather near each other during recess (during approach also on the non-acting side of the teeth). The usual conditions are such that the faces do not touch; but the conditions may be such that the faces will touch each other without interference, for a certain arc of recess; or, finally, the conditions may be such that the faces would interfere, which would make the action of the wheels impossible.

To determine whether a given case is possible it is necessary to refer to the double generation of the epicycloid and of the hypocycloid. It will suffice to say here that, if the sum of the radii of the describing circles is just equal to the distance between the axes of the gear and annular, double contact will occur. If the sum of the radii of the describing circles exceeds the distance between the axes there will be interference.

9–41. Low-Numbered Pinions, Cycloidal System. The obliquity of action in cycloidal gears is constantly varying; it diminishes during the approach, becoming zero at the pitch point, and then increases during the recess. For wheels doing heavy work it has been found by experience that the maximum obliquity should not in general exceed 30°, giving

a mean of 15°. When more than one pair of teeth are in contact, a high maximum is less objectionable.

As the number of teeth in a wheel decreases, they necessarily become longer to secure the proper path of contact, and both the obliquity of action and the sliding increase. From the preceding considerations the

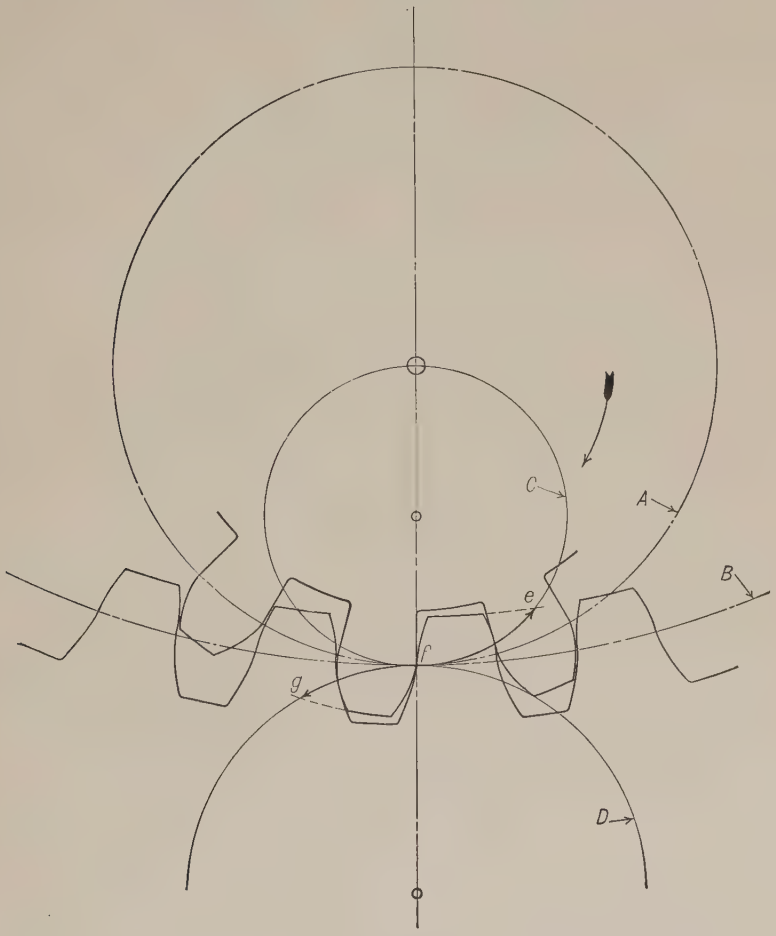

Fig. 9–29

practical rule is deduced that, for millwork and general machinery, no pinion of less than 12 teeth should be used if it is possible to avoid it.

It often becomes necessary, however, to use wheels having less than 12 teeth, in light-running mechanism, such as clockwork. In such cases a greater obliquity may be admissible, and for light work the flank-describing circle may be made large.

Under these conditions it is possible to use a cycloidal pinion of a very small number of teeth.

9–42. Sang's Theory. Professor Edward Sang many years ago presented an elaborate discussion of a method of forming gear teeth the underlying principle of which is the same as that used in modern gear-cutting machines which form the teeth on the generating principle. His theory may be briefly explained as follows: Assume a gear A having any suitable tooth form. Construct, by either of the methods given previously, the tooth forms conjugate to A for a series of gears B_1, B_2, — B_n, having different sizes of pitch circles. Next select any gear (say B_x) of the series B and construct another series C_1, C_2, — C_n whose teeth shall be conjugate to B_x. Then, from the method of forming the conjugate curves, any gear of the series C will have tooth curves conjugate to any gear of series B, but not necessarily conjugate to another one of its own series or to the original gear A. If, however, the teeth on A were of such shape that the teeth on any one gear of series C have the same form as the gear of series B having the same number of teeth then every gear will have teeth which are conjugate to all the others and if the pitches and other proportions are alike the gears are completely interchangeable. The tooth on a rack of either series will be bounded by four curves exactly alike, occurring in alternate reversion.

Since it may not be an easy matter to select the tooth outline of gear A directly to conform to the above requirement, the rack may be used as the starting point. Any reasonable outline may be given the rack tooth, provided the faces and flanks are alike, reversed in direction.

Any number of gears may be formed whose teeth are conjugate to this rack tooth, and these gears will all be conjugate to each other. Also any one of these gears may be used to form others, and all will be interchangeable, provided the pitch and other dimensions are correct. In the gear generating machines the gear may be formed directly from a cutter corresponding to the rack or to any gear conjugate to the rack. Although, as above suggested, any curve may be chosen for the rack tooth, the involute rack, having straight-sided teeth, is the one commonly used.

9–43. Cutting Spur Gears. Any attempt at a complete description of the processes used in manufacturing gears would be out of place here.

The two basic methods of cutting the teeth are:

1. The use of a milling cutter or planing tool the shape of which conforms to the shape of the space between the teeth of the gear which is to be cut. In the case of the formed tool, if the teeth are to be exact a different tool must be used for every different size of gear, since the shape of the tooth curve depends upon the size of the base circle in in-

volute gears and upon the size of the pitch circle in cycloidal gears. Where the formed cutter is employed the same one is used to cut several sizes of gears, the result being that the teeth on all but one of the series are approximate.

2. The generating method.

There are a number of ways of applying the generating principle. The basic idea, however, is to impart to the cutting tool and to the gear which is being cut such motions that relative to each other they have the same motion that the gear and a rack, or another gear, running together would have. That is, the cutter, being the equivalent of or conjugate to the rack tooth, cuts or generates its own conjugate on the gear blank.

9–44. Stepped Wheels. If a pair of spur wheels are cut transversely into a number of plates, and each plate is rotated through an angle, equal to the pitch angle divided by the number of plates, ahead of the adjacent plate, as shown in Fig. 9–30, the result will be a pair of *stepped wheels*. This device has the effect of increasing the number of teeth without diminishing their strength; and the number of contact points is also increased. The action for each pair of plates is the same as that for spur wheels having the same outlines. In practise there is a limit to the reduction in the thickness of the plates, depending on the material of the teeth and the pressure to be transmitted, since too thin plates would abrade. The number of divisions is not often taken more than two or three, and the teeth are thus quite broad. These wheels give a very smooth and quiet action.

9–45. Twisted Spur or Helical Gears. If, instead of cutting the gear into a few plates, as shown in Fig. 9–30, the number of sections is infinite, the result is a helical gear such as that shown in Fig. 9–31.

The twisting being uniform, the elements of the teeth become helices, all having the same lead. See §§ 9–57 and 9–58. The line of contact between two teeth will have a helical form, but will not be a true helix; the projection of this helix on a plane perpendicular to the axis will be the ordinary path of contact. It can easily be seen that the common normal at any point of contact can never lie in the plane of rotation, but will make an angle with it. The line of action then can have three components: (1) a component producing rotation, perpendicular to the plane of the axes; (2) a component of side pressure, parallel to the line of centers; (3) a component of end pressure parallel to the axes. The end pressure may be neutralized as explained in § 9–46.

9–46. Herringbone Gears. A gear like that shown in Fig. 9–32, known as a herringbone gear, is equivalent to two helical gears, one having a right-hand helix and the other a left-hand helix. The use of

a pair of gears of this type eliminates the end thrust on the shaft referred to in the preceding paragraph.

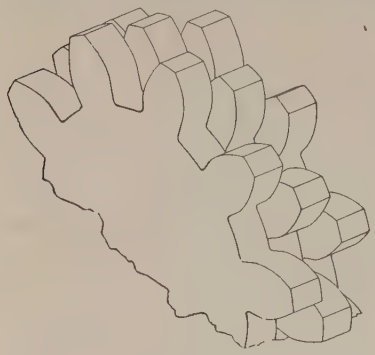

FIG. 9–30

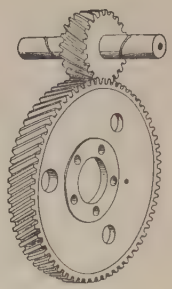

FIG. 9–31

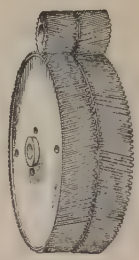

FIG. 9–32

9–47. Pin Gearing. In this form of gearing the teeth of one wheel consist of cylindrical pins, and those of the other of surfaces parallel to cycloidal surfaces, from which they are derived. Fig. 9–33 shows a pair of pin gears. In Fig. 9–34 let o_1 and o_2 be the centers of the pitch circles whose circumferences are divided into equal parts, as ce and cg.

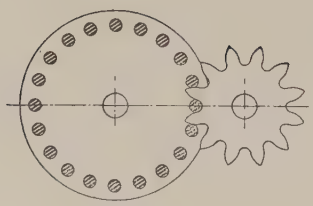

FIG. 9–33

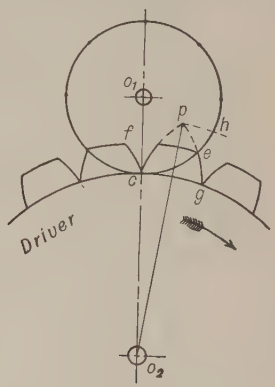

FIG. 9–34

Now if we suppose the wheels to turn on their axes, and to be in rolling contact at c, the point e of the wheel o_1 will trace the epicycloid gp on the plane of the wheel o_2, and merely a point e upon the plane of o_1. Let cf be a curve similar to ge and imagine a pin of no sensible diameter — a rigid material line — to be fixed at c in the upper wheel. Then, if the lower one turn to the right, it will drive the pin before it with a constant velocity ratio, the action ending at e if the driving curve be terminated at f as shown.

If the pins be made of a reasonable diameter, the outlines of the teeth upon the other wheel are curves parallel to the original epicycloids, as shown in Fig. 9–35. The diameter of the pins is usually made about equal to the thickness of the tooth, the radius being, therefore, about one-quarter the pitch arc. This rule, however, is not imperative, as the pins are often made considerably smaller.

Clearance for the pin is provided by forming the root of the tooth with a semicircle of a radius equal to that of the pin, the center being inside of the pitch circle an amount equal to the clearance required.

The pins are ordinarily supported at each end, two disks being fixed upon the shaft for the purpose, thus making what is called a *lantern* wheel or pinion.

In wheel work of this kind the action is almost wholly confined to one side of the line of centers. In the elementary form (Fig. 9–34) the action is wholly on one side, and receding if o_2 drives, since it cannot begin until the pin reaches c and ceases at e; if o_1 is considered the driver, action begins at e, ends at c, and is wholly approaching. *As approaching action is injurious, pin gearing is not adapted for use where the same wheel has both to drive and to follow; the pins are therefore always given to the follower, and the teeth to the driver.*

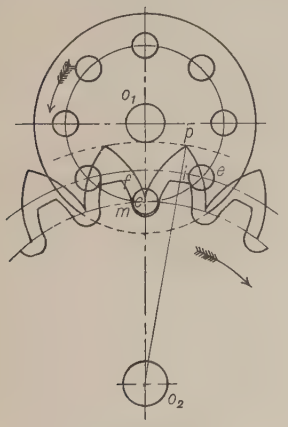

Fig. 9–35

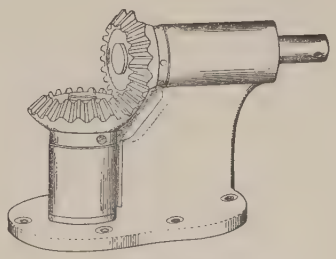

Fig. 9–36

9–48. Bevel Gears. A pair of bevel gears bears the same relation to a pair of rolling cones that a pair of spur gears bears to rolling cylinders.

Fig. 9–36 shows two bevel gears meshing together. Here, as with spur gears, the angular speeds are inversely proportional to the number of teeth.

The pitch circle of a bevel gear is the base of the cone which the gear replaces.

9–49. To Draw the Blanks for a Pair of Bevel Gears. A convenient way to gain an understanding of the principle of bevel gear design will be to study the method of drawing the blanks from which a pair of bevel gears are to be cut. Let it be assumed that a 6-pitch, 12-tooth gear is to mesh with an 18-tooth gear, the axes to intersect at 90°. Start with the point O, Fig. 9–37, as the point of intersection of the two axes.

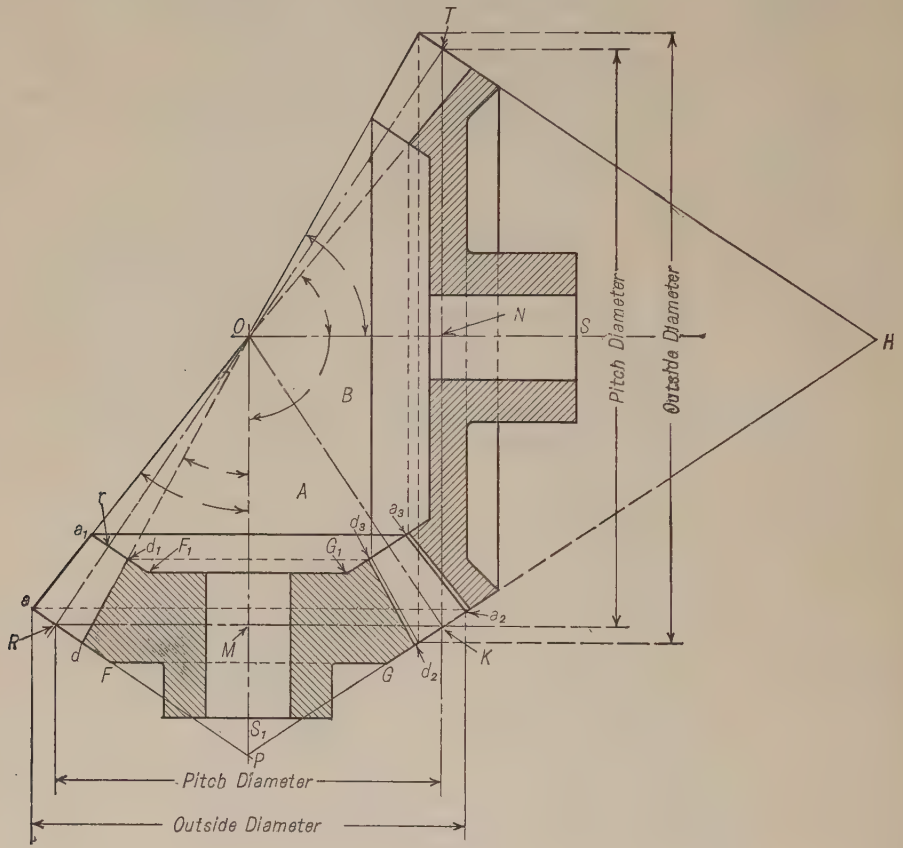

FIG. 9–37

Draw OS and OS_1 making the required angle (in this case 90°). These are the center lines of the shafts. Assume that the 12-tooth gear is to be on S_1. Call this gear A and the 18-tooth gear B. Since A has 12 teeth and is 6-pitch, its pitch diameter, that is, the diameter of the base of its pitch cone, is $12 \div 6$ or 2 in. In like manner the pitch diameter of B is $18 \div 6$ or 3 in. From O measure along OS_1 a distance OM equal to the pitch radius of B ($1\frac{1}{2}$ in.) and, through M, thus found,

draw a line perpendicular to OS_1. In like manner make ON equal to the pitch radius of A and draw a line through N perpendicular to OS. These lines intersect at K. Make MR equal to MK and NT equal to NK. From R, K, and T draw lines to O. Then the triangle ORK is the projection of the " pitch cone " of the gear A and OTK that of the " pitch cone " of B. It will be noticed that the above construction is the equivalent of that for rolling cones. Next, draw through K a line perpendicular to OK meeting OS_1 at P and OS at H. Draw a line from H through T and from P through R. The cone represented by the triangle THK is called the *normal cone* of the gear B, and that represented by the triangle RPK is called the normal cone of A. These cones will be explained in more detail later.

From R lay off Ra equal to the addendum that is to be used on gear A (this is determined by the same considerations that would be used for the addendum on a spur gear). Along RO lay off Rr equal to the desired length of gear face (§ 9–9). Through r draw a line parallel to PR. From a draw a line to O meeting this parallel at a_1. Through a draw a line parallel to RK meeting PKH at a_2. From a_1 draw a line parallel to RK meeting a line drawn from a_2 to O at a_3. Lay off along RP the distance Rd equal to the dedendum and draw from d toward O meeting a_1r at d_1. Find d_2 and d_3 in the same way that a_2 and a_3 were found. The figure add_1a_1 represents the tooth. The dimensions of the hub and the position of lines FG and F_1G_1 and of the corresponding lines on the other gear may be made anything that is desirable.

It will appear from this construction that bevel gears must be laid out in pairs.

9–50. Teeth for Bevel Gears. The gear blanks, as laid out in § 9–49, are of the form ordinarily used, and the information there given is perhaps all that a person making use of bevel gears would need. In order to understand the principles underlying the action of the gears it may be desirable to notice the relation between bevel gear teeth and spur gear teeth.

In the discussion on the teeth of spur wheels, the motions were considered as taking place in the plane of the paper, and lines instead of surfaces have been dealt with. But the pitch and describing curves, and also the tooth outlines, are but traces of surfaces acting in straight-line contact, and having their elements perpendicular to the plane of the paper. In bevel gearing the pitch surfaces are cones, and the teeth are in contact along straight lines, but these lines are perpendicular to a spherical surface, and all of them pass through the center of the sphere, which is at the point of intersection of the axes of the two pitch cones.

In Fig. 9–38, O is the center of the sphere, AOC and BOC are the pitch cones. If the teeth are involute, cones such as MON and KOL are the

base cones, and the teeth may be thought of as being generated by a plane rolling on each of the base cones, the ends of the teeth lying on the surface of the sphere, and the tooth outlines being the curves traced on this surface by the plane which generates the teeth.

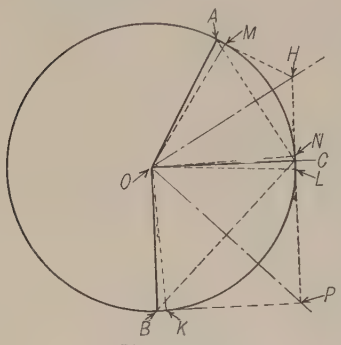

Fig. 9–38

9–51. Drawing the Teeth on Bevel Gears. Tredgold's Approximation. Since narrow zones of the sphere, Fig. 9–38, near the circles *BC* and *AC*, will nearly coincide with cones whose elements are tangent to the sphere at *B*, *C*, and *A*, the conical surfaces may be substituted for the spherical ones without serious error, and as the tooth outlines are always comparatively short they may be supposed to lie on the cones. These cones *BPC* and *AHC* are called the normal cones and correspond to the cones *RPK* and *THK* of Fig. 9–37. Fig. 9–39 shows the method of drawing the tooth outlines.

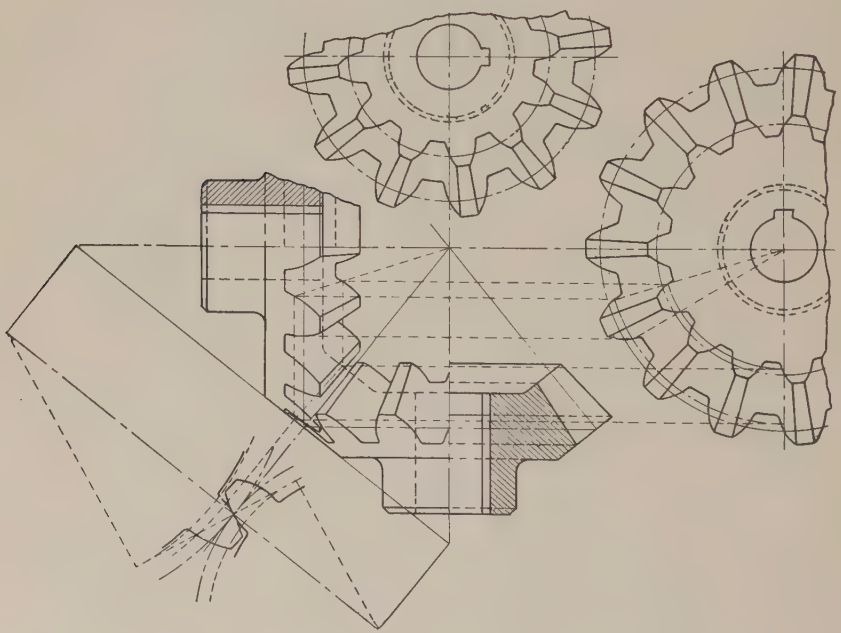
Fig. 9–39

It will be noticed that the developments of portions of the normal cones are treated as if they were pitch circles of spur gears and the teeth

are drawn on the development exactly as if they were teeth of spur gears, and are then transferred to the other views by ordinary principles of projection.

9–52. Crown Gears. When the angle at the apex of the cone of one of a pair of bevel gears is 180° the pitch cone becomes a flat disk and the normal cone becomes a cylinder. Such a gear is analogous to a rack bent in the form of a circle. The teeth taper inward, elements of the teeth converging toward the center of the disk. Another bevel of any number of teeth may be designed to run with a crown gear but the angle between the axes will depend upon the ratio of the teeth. Figs. 9–40 and 9–41 show such a pair of gears.

9–53. Internal Bevel Gears. Fig. 9–42 is a diagram of a pair of bevel gears in internal contact, analogous to the cylindrical gears shown in Fig. 9–21. Though this type of gear is not common, it is sometimes used where the position of the axes, speed relation, and relative sense of rotation make it more convenient than other forms of gear connection.

9–54. Twisted Bevel Gears. The teeth of bevel gears may be twisted in the same manner as the teeth of spur gears. (See § 9–45.) Fig. 9–43 shows a pair of twisted bevels used for the drive to the differential of an automobile.

9–55. Skew Bevels or Hyperboloidal Gears. Fig. 9–44 shows a pair of skew bevel gears used in cotton machinery. Here the shafts are at right angles, non-intersecting, but passing so near each other that ordinary helical gears cannot be used to give the desired speed ratio.

If the gears are accurately made, the pitch surfaces of these gears are hyperboloids of revolution, and the teeth are in contact along straight lines. The angular speeds are inversely as the pitch diameters. See § 8–17, page 167.

Correct teeth for hyperboloidal gears are difficult if not impossible to construct. In practise there are several methods of constructing approximately correct teeth.

An important type of skew bevels known as **hypoid gears** was developed by the Gleason Works at Rochester, New York. Though not hyperboloidal gears in the strict sense, these are produced by a generating process giving conjugate teeth which have satisfactory action.

9–56. Screw Gearing. This class of gearing is used to connect non-parallel and non-intersecting shafts and includes the two types known as worm and wheel (Fig. 9–45) and helical gears (Fig. 9–46). Helical gears used for this purpose are often, but inaccurately, called spiral gears. In the helical gears and the elementary forms of worm and wheel the teeth have point contact. The speed ratio is not necessarily in the inverse ratio of the diameters. The action of gears of this class is

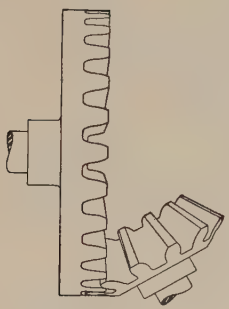

FIG. 9–40

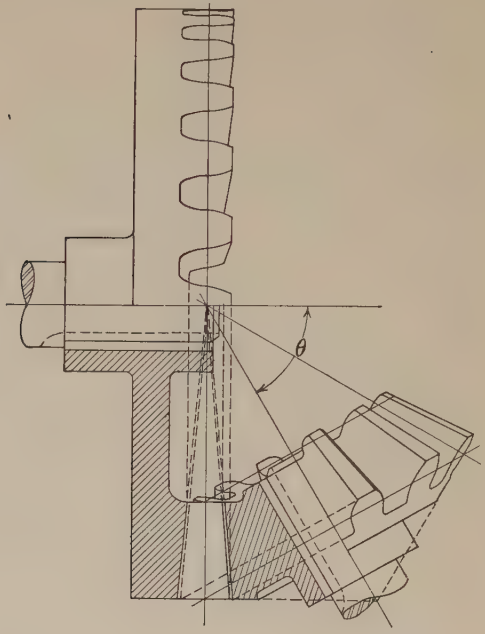

FIG. 9–41

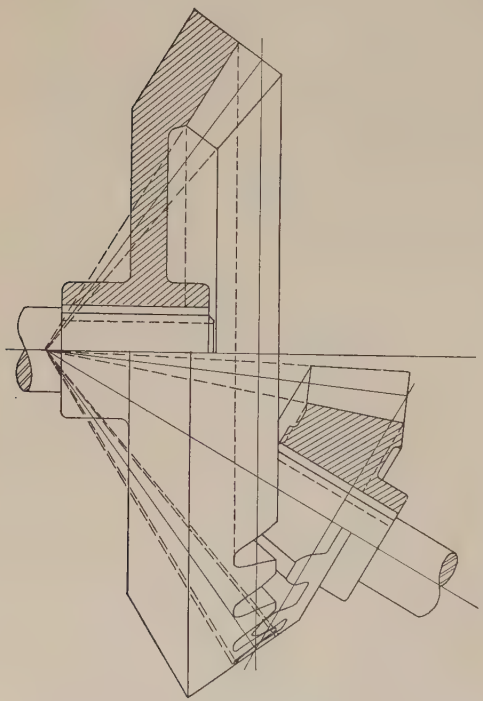

FIG. 9–42

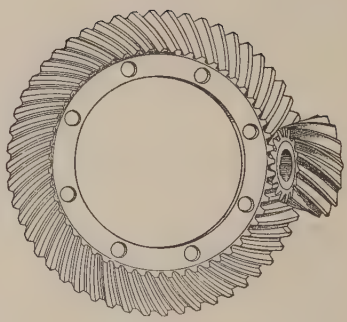

FIG. 9–43

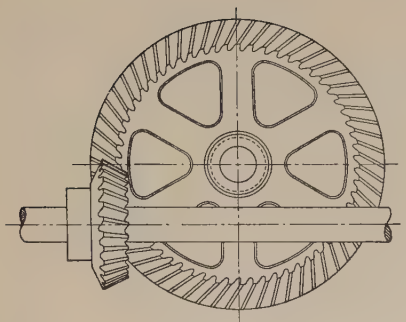

FIG. 9–44

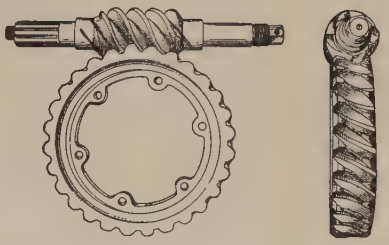

FIG. 9–45

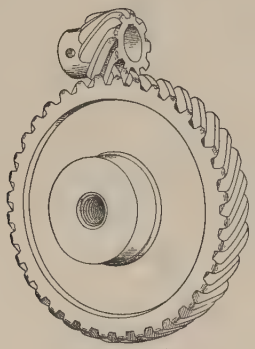

FIG. 9–46

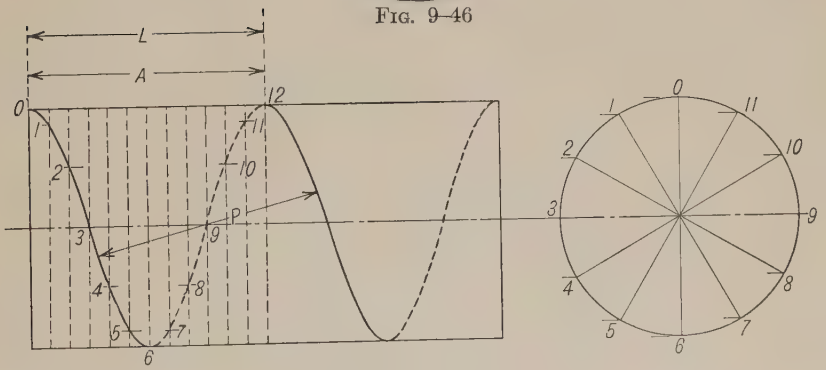

FIG. 9–47

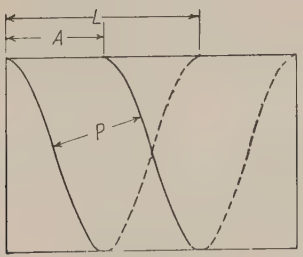

FIG. 9–48

similar to the action of a screw and nut which will be considered in a later chapter. This is particularly evident in the worm and wheel. The distinction between the worm and wheel and the helical gears, however, is not a very clear one, being largely a matter of speed ratio and manner of forming the teeth. Both may properly be considered here as helical gears and the following discussion will apply to both.

9–57. The Helix; Its Construction and Properties. A helix is a curve wound around the outside of a cylinder or cone advancing uniformly along the axis as it winds around. The nature of the curve and the method of drawing it may be understood from a study of Fig. 9–47.

The *angle of a helix* is the angle which a straight line tangent to the helix at any point makes with an element of the cylinder. This angle is the same for all points on a cylindrical helix. Two helices are said to be normal to each other when their tangents drawn at the point where the helices intersect are perpendicular to each other.

When two parallel lines wind around a cylinder forming parallel helices, as in Fig. 9–48, the result would be called a double helix; three lines would give a triple helix, and so on. If the helix slopes as in Fig. 9–47 it is called a right-hand helix; if it slopes in the reverse direction it is called a left-hand helix.

9–58. Lead. Axial Pitch. The distance L, Figs. 9–47 and 9–48, by which a helix advances along the axis of the cylinder for one turn around is called the **lead.** The distance A, *measured parallel to the axis,* from one point on a helix to the corresponding point on the next turn of a single helix, or to the corresponding point on the next helix in a multiple helix, is called the **axial pitch.** In a single helix this is equal to the lead; in a double helix the axial pitch is equal to one-half the lead; in a triple helix, one-third of the lead, and so on.

9–59. Normal Pitch. The distance P, between a point on a helix and the corresponding point on the next turn of a single helix or the corresponding point on the next helix in the case of a multiple helix, *measured along the normal to the helix,* is called the **normal pitch.**

9–60. Helical Gears are gears whose teeth wind partially around the pitch cylinders. A pair of such gears may be used to connect parallel shafts, as shown in Fig. 9–31, or non-parallel shafts, which is the case now under discussion. The method of forming the teeth and the action of the teeth differ in the two cases.* The definitions given above apply to the teeth of helical gears. In order that two helical gears may work together they must have the same normal pitch and

* The twisted gears (Fig. 9–31) have line contact between teeth; the helical gears in general have point contact, or multiple point contact.

the angle between the shafts must be such that the tangent to the pitch helices of the two gears coincide at the pitch point. From this it follows that the sum of the angles of their helices must be equal to the angle between the shafts, or the supplement of this angle.

Fig. 9–49 shows the pitch cylinders of a pair of helical gears. The line MN is the common tangent to the teeth at the point of contact of the pitch cylinders (that is, the pitch point). β is therefore the angle

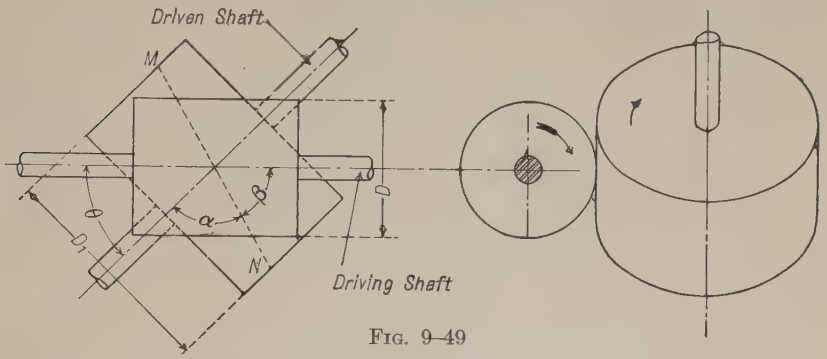

FIG. 9–49

of the helix of the driver and α the angle of the helix of the driven gear. Here the angle θ between the two shafts is equal to $180° - (\beta + \alpha)$.

Fig. 9–50 is the development of the surfaces of the two pitch cylinders shown in Fig. 9–49, the slanting lines being the development of imaginary helices at the centers of the teeth on the pitch cylinders. The perpendicular distance between these lines is the normal pitch P (the same in both gears). The distances C and C_1 between the points of intersection of two adjacent teeth with the ends of the cylinder (EF and E_1F_1) are the circular pitches of the respective gears. It will be noticed that the circular pitches of the two gears are not alike but depend upon the helix angles.

If the relation between the angles θ and β is such that α becomes 0 the driven gear becomes like an ordinary spur gear. Hence a properly formed helical gear may be made to drive a spur gear if their axes are set at the proper angle with each other.

9–61. Relation between the Circular Pitches of a Pair of Helical Gears. Referring still to Fig. 9–50

$$C = \frac{P}{\cos \beta} \quad \text{and} \quad C_1 = \frac{P}{\cos \alpha} \tag{7}$$

Therefore

$$\frac{C_1}{C} = \frac{\cos \beta}{\cos \alpha} \tag{8}$$

9–62. Relation between Numbers of Teeth in a Pair of Helical Gears. Let T represent the number of teeth in the driver (Fig. 9–50) and T_1 the number of teeth in the driven gear.

Then
$$T = \frac{\pi D}{C} \quad \text{and} \quad T_1 = \frac{\pi D_1}{C_1} \tag{9}$$

Therefore
$$\frac{T_1}{T} = \frac{\dfrac{\pi D_1}{C_1}}{\dfrac{\pi D}{C}} = \frac{D_1 C}{D C_1}$$

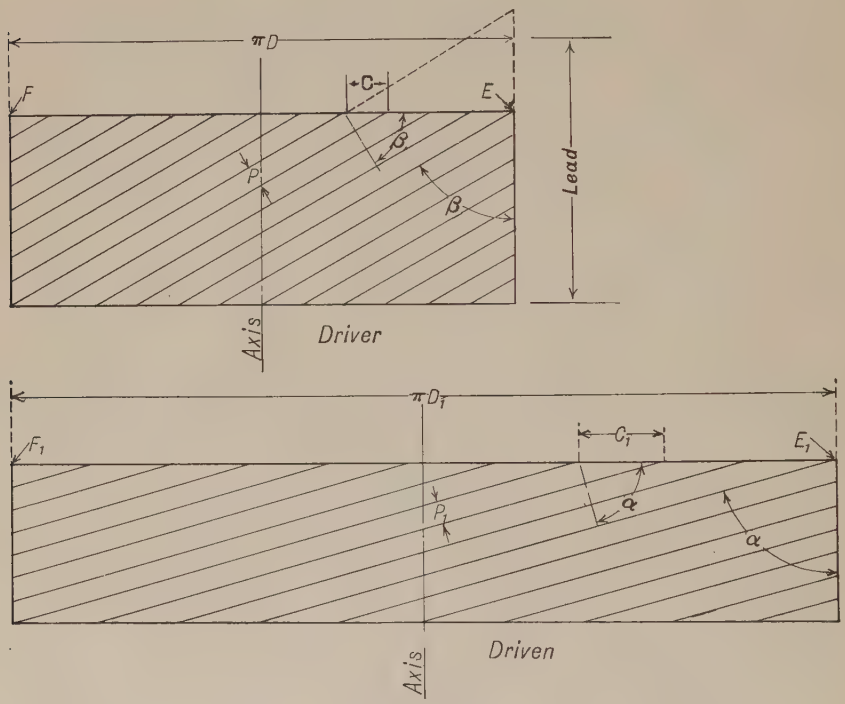

Fig. 9–50

But from equation (8)
$$\frac{C}{C_1} = \frac{\cos \alpha}{\cos \beta}$$

Therefore
$$\frac{T_1}{T} = \frac{D_1 \cos \alpha}{D \cos \beta} \tag{10}$$

That is, *the numbers of teeth are directly as the product of the pitch diameters multiplied by the cosines of the helix angles.*

9–63. Speed Ratio of Helical Gears. As for spur gears, the angular speeds of a pair of helical gears are inversely as the numbers of teeth. If N represents the angular speed of the driver, and N_1 of the driven gear, it follows from equation (10) that

$$\frac{N_1}{N} = \frac{D \cos \beta}{D_1 \cos \alpha} \tag{11}$$

9–64. Relation between Lead, Helix Angle, and Pitch Diameter. Since the development of one turn of a helix is the hypotenuse of a right triangle of which one leg is the circumference of the cylinder on which the helix lies, and the other leg is the lead (see upper diagram, Fig. 9–50) it follows that

$$\frac{\text{Circumference}}{\text{Lead}} = \tan \text{ helix angle}$$

Therefore

$$\text{Lead} = \frac{\pi D}{\tan \beta} \tag{12}$$

9–65. Spur Gear Corresponding to Section of Helical Gear on Normal Plane. In designing a helical gear it may be desirable to make the tooth section on the normal plane correspond to some standard spur gear tooth. The section of the pitch cylinder on a plane normal to the helix is an ellipse with minor axis equal to the pitch diameter and major axis equal to the pitch diameter divided by the cosine of the helix angle. Hence $A = \dfrac{D}{\cos \beta}$, where A is the major axis of the ellipse.

The tooth outline in the normal plane section will be that of a standard pitch gear of pitch circle having a radius corresponding to the radius of curvature of the ellipse at the end of its minor axis. This radius (ρ) is given in the equation

$$\rho = \frac{\text{Radius of pitch cylinder}}{\cos^2 \beta} \tag{13}$$

Then, letting T = number of teeth on helical gear, T_n = number of teeth on equivalent gear in normal plane, and since

$$T = \frac{\pi D}{C} = \frac{\pi D}{\dfrac{P}{\cos \beta}} = \frac{\pi D \times \cos \beta}{P}$$

and

$$T_n = \frac{2 \pi \rho}{P}$$

or, substituting the value of ρ from equation (13), $T_n = \dfrac{\pi D}{P \cos^2 \beta}$, therefore

$$\frac{T_n}{T} = \frac{\dfrac{\pi D}{P \cos^2 \beta}}{\dfrac{\pi D \cos \beta}{P}} = \frac{1}{\cos^3 \beta} \tag{14}$$

9–66. Distance between Axes. Let P_d = diametral pitch of teeth on the normal plane. Then from equation (3) $P = \dfrac{\pi}{P_d}$, where P = circular pitch on the normal plane.

Substituting this value of P in equation (7) we get

$$C = \frac{\pi}{P_d \cos \beta} \quad \text{but} \quad C = \frac{\pi D}{T}$$

therefore $$\frac{\pi D}{T} = \frac{\pi}{P_d \cos \beta} \quad \text{or} \quad D = \frac{T}{P_d \cos \beta} \tag{15}$$

similarly $$D_1 = \frac{T_1}{P_d \cos \alpha}$$

whence $$D + D_1 = \frac{T}{P_d \cos \beta} + \frac{T_1}{P_d \cos \alpha} = \text{twice the distance between centers of shafts} \tag{16}$$

9–67. Selecting the Number of Teeth and Helix Angles.

Example. Given two shafts S and W located at right angles with each other, the axis of S being 15 in. above the axis of W. They are to be connected by a pair of helical gears so that S shall turn twice as fast as W. The helix angle on the smaller gear is to be as nearly as possible 45°; the sum of the pitch radii must not vary from 15 in. more than 0.001 in. Diametral pitch on normal plane is 2. Find number of teeth and helix angle for each gear.

Solution. (See Fig. 9–51.) Using the same notation as in the preceding discussion, the first step will be to calculate the theoretical numbers of teeth T and T_1 from equation (16) using $\beta = 45°$, $\alpha = 90° - 45° = 45°$, and $D + D_1 = 15 \times 2$. Second, taking integers for T and T_1 nearest to the calculated value, recalculate the center distance. Third, if the center distance thus found does not come within the required limits change the values of α and β slightly and recalculate the center distance. Continue the process until the center distance is within the specified limits.

Since the speed ratio is 2 : 1, $T = 2\ T_1$. From equation (16)

$$\frac{2\ T_1}{2 \cos 45} + \frac{T_1}{2 \cos 45} = 30$$

$$T_1 = \frac{2 \times 30}{3} \cos 45 = 20 \cos 45° = 20 \times 0.7071 = 14.14$$

Use $T_1 = 14$ and $T = 28$

Then $$D + D_1 = \frac{28}{2 \times 0.7071} + \frac{14}{2 \times 0.7071} = \frac{21}{0.7071} = 29.699$$

which is much too small.

Try $\alpha = 43° 30'$. Then $\beta = 90 - 43° 30' = 46° 30'$.

Calculating $D + D_1$ for these values of α and β gives 29.989 which is still too small. Another trial with $\alpha = 43° 27'$ and $\beta = 46° 33'$ gives $D + D_1 = 29.998$ or center distance 14.999 which satisfies the requirements.

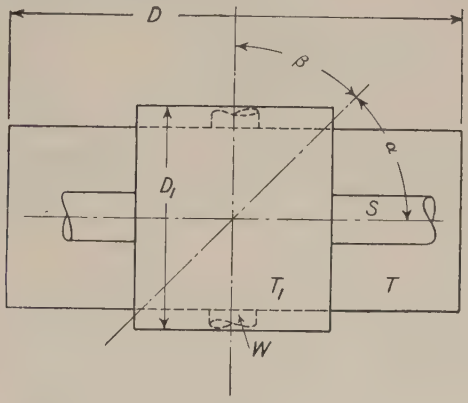

Fig. 9–51

9–68. Directional Relation of Helical Gears. The direction in which two helical gears turn relative to each other depends upon the direction in which the helices slope at the pitch point. This can best be decided for any given case by making a sketch similar to Fig. 9–52.

Let the shaft S be turning so that the top side of the gear A is moving in the direction of the feathered arrow. Then the pitch point H on gear A will move in the direction Hh_s. If the line Hh_s is assumed to represent the velocity of H on A, resolve this velocity into components along the common tangent XX and along the line on which the pitch point of gear B is moving, giving Hh_w as the velocity of the pitch point on B and Hh_t as the sliding along the common tangent. Since Hh_w points to the right it follows that the upper side of B is moving in that direction.

9–69. Worm and Wheel. The distinction between a worm and wheel and a helical gear pair has never been a very clear one, but present practise seems to be to apply the name worm and wheel to the special case of helical gears where the axes are at right angles and the wheel is

" close fitting," that is the outside of the wheel, instead of being cylindrical, follows the curve of the outside of the worm as shown in Fig. 9–53. With this form of tooth on the wheel the contact between a pair of teeth is along the entire length of the wheel tooth, giving line contact instead of merely point contact as is the case with helical gears which are bounded

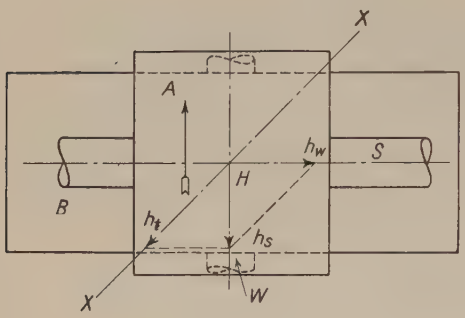

Fig. 9–52

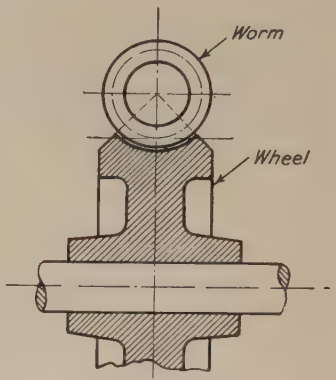

Fig. 9–53

by cylindrical surfaces. In general, the angular speed ratio between the worm and the wheel is high, although it may be as low as 4 or 5 to 1. The worm may be thought of as a screw and the wheel as the nut. If the thread is a single helix making one or more complete turns the worm may be considered as a helical gear of one tooth and the angular speed ratio will be

$$\frac{\text{Angular speed of wheel}}{\text{Angular speed of worm}} = \frac{1}{\text{Number of teeth in wheel}}$$

If the worm is double threaded, that is, has two parallel helical threads of equal lead, then it corresponds to a gear of two teeth, and similarly for other numbers of threads.

In general therefore

$$\frac{\textit{Angular speed of wheel}}{\textit{Angular speed of worm}} = \frac{\textit{Number of separate threads on worm}}{\textit{Number of teeth in wheel}} \qquad (17)$$

It is evident that this relation is the same as for any pair of gears, since the number of threads is really the same as the number of teeth.

9–70. Worm and Wheel Related to Rack and Pinion. A section of a worm thread on a plane containing the worm axis and perpendicular to the wheel axis may be thought of as a rack of infinitesimal thickness, and the section of the wheel tooth cut by the same plane as an infinitely

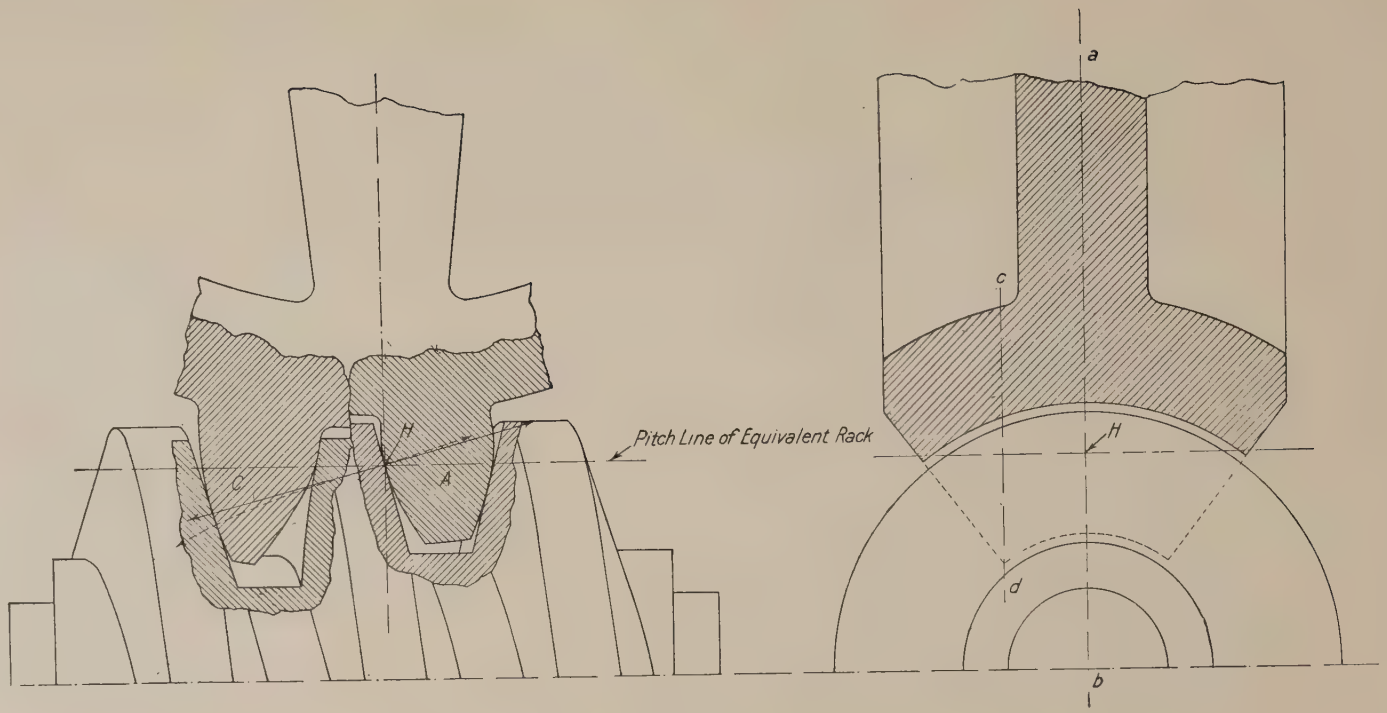

FIG. 9–54

thin gear. Now since all axial sections of the worm are alike one complete turn of the worm has the same effect on the gear as motion of the rack through a distance equal to the lead of the worm helix. This is suggested in Fig. 9–54 where the tooth marked A is in the section of the wheel tooth on the axial plane ab of the worm and the curves adjacent to A are the corresponding sides of the worm thread section.

At C is a section of the wheel tooth on plane cd with corresponding thread section.

If, as is usual, the axial section of the worm thread is straight sided, then the section of the worm and the wheel in that plane correspond to an involute rack and pinion with path of contact as shown in full lines. The section of the worm on plane cd will be unsymmetrical, and the outline of tooth C will be curves conjugate to the worm section. The path of contact on this plane is as shown dotted. The action between the worm thread and the wheel teeth therefore corresponds to that of an infinite number of thin racks and pinions, each differing slightly from its neighbors but all giving the same speed ratio.

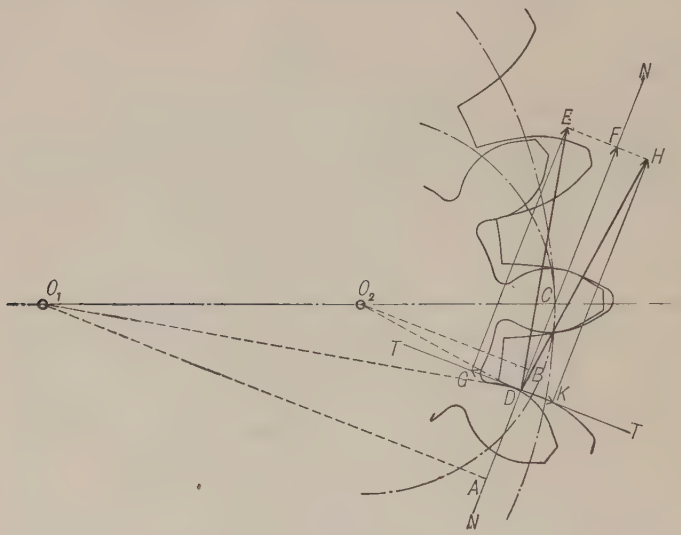

Fig. 9–55

9–71. Rate of Sliding of Gear Teeth. To determine the rate of sliding of one gear tooth upon another at any position it will be necessary to find the linear velocity of the point of contact D (Fig. 9–55) in each of the teeth, and resolve these linear velocities into their components along the common normal and the common tangent. Let DE represent the linear velocity of D around O_1; the components of DE along the com-

mon normal and tangent are DF and DG respectively. The direction of the motion of D around O_2 is along the line DH. To find the magnitude of its linear velocity we have DF as its component along the common normal, since this normal is the line of connection between the two sliding surfaces, and components along the line of connection must be equal. This will give DH as the linear velocity of D around O_2, and DK as its component along the common tangent. The rate of sliding will be found to be GK, equal to $DG + DK$, since the components along the tangent act in opposite directions.

9–72. Velocity of Rack. The following example illustrates the law of conjugate curves as applied to a rack.

Given a pinion driving a rack. To prove: if, for every position of a pair of teeth in contact, the point of intersection of their common normal at the point of contact, and a radius of the pinion drawn perpendicular to the direction of the rack's motion, is at a constant distance from the center of the pinion, then the linear speed of the rack is constant provided the angular speed of the pinion is constant. Also, the linear speed of the rack is equal to the angular speed of the pinion in radians multiplied by the distance from the center of the pinion to the point of intersection of the common normal and the radius drawn perpendicular to the direction of the rack's motion.

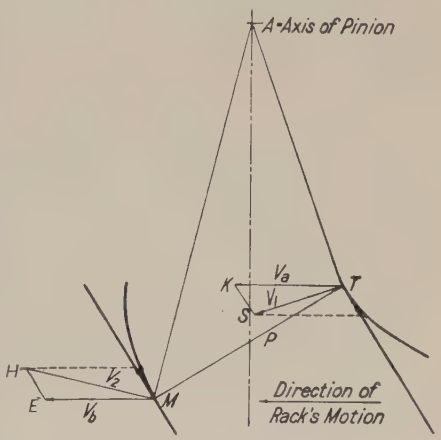

FIG. 9–56

Solution. (See Fig. 9–56.) Let ω = angular speed of pinion, in radians. Let T and M be any two points of contact of a pair of teeth. TP and PM are the common normals. V_1 = velocity of T on pinion. V_2 = velocity of M on pinion. If ω is constant $\frac{V_1}{V_2} = \frac{AT}{AM}$. By resolution V_a and V_b = velocity rack at T and M respectively. From similar triangles (ATP is similar to TSK and APM to MEH), $\frac{V_a}{V_1} = \frac{AP}{AT}$ and $\frac{V_b}{V_2} = \frac{AP}{AM}$. $\therefore \frac{V_b}{V_a} \times \frac{V_1}{V_2} = \frac{AT}{AM} \times \frac{AP}{AP}$. But $\frac{V_1}{V_2} = \frac{AT}{AM}$. $\therefore \frac{V_b}{V_a} = \frac{AP}{AP}$ or $V_b = V_a$ if AP is constant. Again $V_1 = \omega AT$. Putting this value of V_1 in the equation $\frac{V_a}{V_1} = \frac{AP}{AT}$ we get $\frac{V_a}{\omega AT} = \frac{AP}{AT}$ $V_a = \omega AP$.

PROBLEMS

IX–1. Find the distance between centers of a pair of gears, one of which has 12 teeth and the other 37 teeth. The diametral pitch is 7.

IX–2. Two shafts are 15 in. on centers. One of the shafts carries a 40-tooth 2 diametral pitch gear which drives a gear on the other shaft at a speed of 150 rpm. How fast is the 40-tooth gear turning?

IX–3. Given a gear of 24 teeth, 4 diametral pitch. The addendum equals 1 in. ÷ diametral pitch, the clearance is to be one-eighth of the addendum, and the backlash is to be 2 per cent of the circular pitch. Calculate the following, giving results to three decimal places: the pitch diameter, the diameter of the blank gear before cutting the teeth (addendum diameter), the depth of teeth, the backlash, and the width of tooth and width of space.

IX–4. Find graphically and check by calculation the diameter of the base circle of an involute gear which has a pitch circle 6 in. in diameter and pressure angle 20°.

IX–5. Given an involute gear having 30 teeth, 2 diametral pitch, 15° pressure angle, which would have arcs of approach and recess each equal to the circular pitch if running with another gear just like itself. Find the number of teeth in the smallest possible gear that will run with this with the same pressure angle.

IX–6. Involute gears, $22\frac{1}{2}°$ pressure angle, 1 diametral pitch, addendum $= \frac{3}{4}$ in. ÷ diametral pitch, clearance $= \frac{1}{8}$ in. ÷ diametral pitch, no backlash. A pinion having 9 teeth, turning clockwise, is to drive a gear of 12 teeth. Indicate the path of contact, and angles of approach and recess for each gear; also give the ratio of the arc of action to the circular pitch. Draw two teeth on each gear, having a pair of teeth in contact at the pitch point.

IX–7. Find the diameter and number of teeth of the smallest 3-diametral-pitch pinion with 20° pressure angle, which would allow an arc of recess = arc of approach = the circular pitch, and draw its pitch and addendum circles. If the pinion drives a rack, what is the greatest allowable addendum for the rack?

IX–8. Involute gears, 15° pressure angle; a 30-tooth pinion 2 diametral pitch is to drive a rack. How long can the arc of approach be? Can the arc of recess equal the circular pitch, and why?

IX–9. An involute gear with 21 teeth, 3 diametral pitch, 15° pressure angle, has an addendum diameter of $7\frac{1}{3}$ in. Draw its base circle and pitch circle. Could two such gears properly be used to connect two shafts $7\frac{1}{4}$ in. apart? Give reason for answer.

IX–10. Involute gears, 2 diametral pitch, 15° pressure angle. A 24-tooth pinion is to drive a 32-tooth annular. The arc of approach to be equal to $1\frac{1}{2}$ the circular pitch, and arc of recess to be equal to the circular pitch. Draw the addendum circles. Is each of these arcs possible? (Explain clearly the steps by which this is determined). What is the limit of the path of contact in approach and in recess, and why?

IX–11. Find graphically and check by calculation the least pressure angle that can be used in designing two involute gears of 8 teeth each, exactly alike, to run together.

Suggestion: Assume 1 diametral pitch; lay off $\frac{1}{2}$ circular pitch each side of tangent at pitch point.

IX–12. What is the least pressure angle that can be used in designing two involute gears of 8 teeth and 12 teeth respectively, to run together?

Suggestion: Assume 1 diametral pitch; divide circular pitch in ratio 12 to 8 and lay off along tangent at pitch point.

IX–13. Two cycloidal gears with 10 and 12 teeth respectively; 2 diametral pitch; radial flanks on each.

1. Draw the pitch circles and the describing circles and give their diameters.

2. If the addendum = $\frac{1}{2}$ in. and the 10-tooth pinion drives turning right handed, show the path of contact.

3. How long is the arc of action in terms of the circular pitch? How long must it be to just give perfect action?

IX–14. A pinion with 6 teeth, 1 diametral pitch, is to drive one with 8 teeth. Radial flanks on 8-tooth and the same size describing circle for the flanks of the 6-tooth. The arc of approach to be five-eighths of the circular pitch, and the arc of recess to be three-quarters of the circular pitch.

1. Find the maximum pressure angle in approach and in recess in degrees.

2. Is the given arc of action possible?

IX–15. Cycloidal gears; interchangeable set; 3 diametral pitch; radial flanks on a 15-tooth gear. Addendum equals 1 in. ÷ diametral pitch. Clearance equals one-eighth of the addendum. An 18-tooth pinion drives a 39-tooth annular. Show path of contact. How many teeth would there be in the smallest annular that would gear with the 18-tooth pinion? Show path of contact.

IX–16. Lay out the blanks for a pair of bevel gears, 2 diametral pitch, 15 teeth and 30 teeth. Addendum = $\frac{1}{2}$ in.; clearance = $\frac{1}{16}$ in. Length of teeth on element of pitch cones $1\frac{1}{2}$ in. Axes of shafts intersect at 90°. Assume reasonable dimensions for thickness of metal, diameters of hubs, etc. Give numerical values for the half angles of the pitch cone and addendum cone for each gear.

IX–17. A helical gear having 26 teeth is 3 diametral pitch on the section cut by a plane normal to the helix. The helix angle is 30°. Find the diameter of the pitch cylinder and the lead of the helix.

IX–18. Given a pair of helical gears located as shown. Let $\omega_A = 2$ radians per second, $\omega_B = \frac{\omega_A}{2}$. Diameters equal. Distance between centers not less than 10 in. nor more than 10.1 in. Teeth 4 diametral pitch on normal plane. Outside diameters $\frac{1}{2}$ in. more than diameter of pitch cylinders. Find the helix angle and number of teeth for each gear, and give the distance between axes to the nearest 0.01 in. Draw two views, half size. Draw velocity vector for pitch point of A at scale 1 in. = 2 in. per sec, and by resolution find corresponding vector for B. Find rate of slip at pitch point in inches per second.

If the teeth on A were right-hand helices with helix angle 15° and its angular speed and direction same as before, find by vectors the angular speed and direction of B.

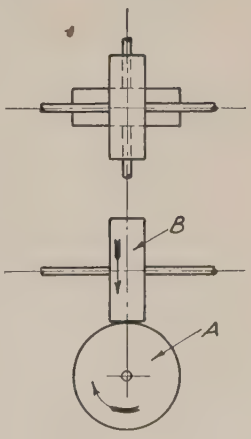

PROB. IX–18

IX–19. Given a single-threaded right-hand worm, 3 in. pitch diameter, 1 in. lead driving a worm wheel which has 36 teeth. The shafts are at 90°. Calculate the pitch diameter of the wheel and draw a full-size diagram similar to that shown (top view).

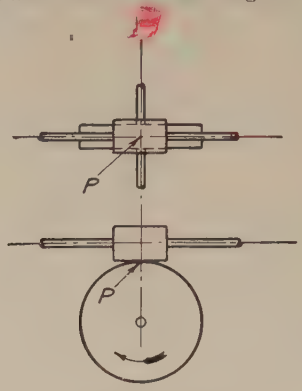

PROB. IX–19

(*a*) Calculate the angle which each helix makes with its axis and draw the common tangent for the worm thread and a tooth of the wheel in contact at P.

(*b*) Determine the direction in which the worm must turn to cause the wheel to turn as shown.

(*c*) The worm turns 72 radians per minute. Draw to a suitable scale the velocity vector of the point on the thread at P. Find graphically the velocity of a point on the pitch cylinder of the wheel. From this find the angular speed of the wheel.

(*d*) Calculate the lead of the helix for the teeth of the wheel.

CHAPTER X

WHEELS IN TRAINS

10–1. Train of Wheels. A train of wheels is a series of rolling cylinders or cones, gears, pulleys, or similar devices serving to transmit power from one shaft to another.

The examples of rolling cylinders, gears, etc., which have been discussed in earlier chapters, are really wheel trains each involving only one pair of wheels. In Fig. 10–1 D is a gear fast to shaft A. E is a gear fast to shaft B and meshing with D. F is another gear also fast to shaft B and meshing with the gear G which is fast to shaft C. If now the shaft A begins to turn, D will turn with it, and, therefore, cause E to turn. Since E is fast to the shaft B the latter will turn with E. Gear F will then turn at the same angular speed as E and will cause G to turn, causing the shaft C to turn with it. That is, D drives E, and F, turning with E, drives G.

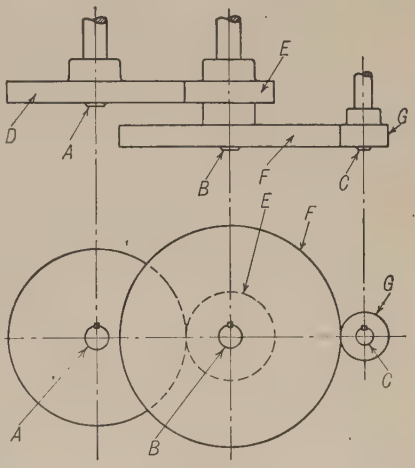

FIG. 10–1

The above is an example of a simple train of gears, consisting of two pairs. Fig. 10–2 shows an arrangement of pulleys similar in action to the gears shown in Fig. 10–1. H is a pulley on the shaft R belted to the pulley J on shaft S. On the same shaft is another pulley K belted to the pulley L on shaft T.

Fig. 10–3 shows a train of wheels involving both gears and pulleys. In this case D is a gear on shaft A, meshing with and driving the gear E on shaft B. On the same shaft is pulley K, belted to the pulley L on shaft C.

10–2. Driving Wheel and Driven Wheel. Referring again to Fig. 10–1, the gear D by its rotation causes E to turn; therefore, D may be called the *driver* or *driving wheel*, and E the *driven wheel*. Similarly F, turning with E, is the driver for the wheel G. Hence, in any train such as here shown, consisting of three axes with two pairs of wheels, two of the wheels are drivers and two are driven wheels.

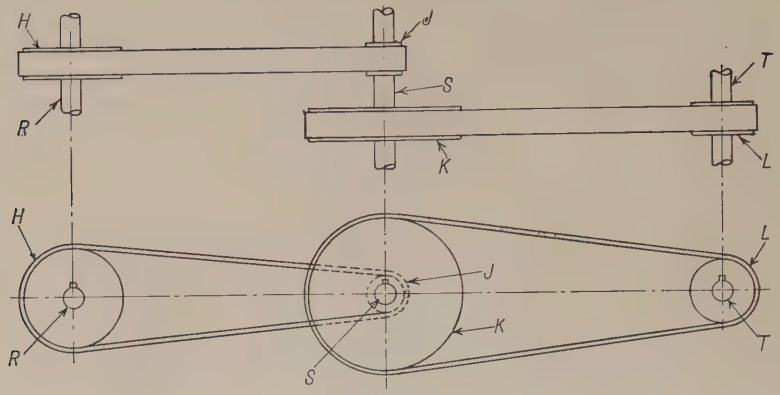

FIG. 10–2

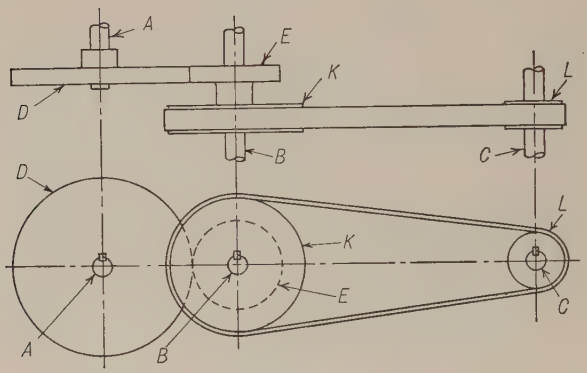

FIG. 10–3

10–3. Idle Wheel. In Fig. 10–4, gear D drives E, which in turn drives F. E is, therefore, both a driven and a driving wheel. Such a wheel is called an *idle wheel.*

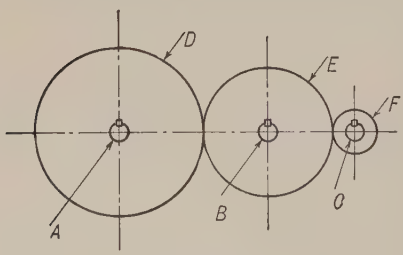

FIG. 10–4

10–4. Train Value. Considering as the fixed piece the member which supports the axes of the wheels of a train, the train value may be defined as the ratio of the absolute angular speed of the last wheel to the absolute angular speed of the first wheel or driver. The member carrying the wheel axes may be the frame of the machine or it may be an arm or link which is itself in motion relative to the frame. For convenience this member will be referred to as the arm of the train.

A more general statement of the meaning of the term train value is as follows:

$$\textit{Train value} = \frac{\textit{Angular speed of last wheel relative to arm}}{\textit{Angular speed of first wheel relative to arm}}$$

The letter e will be used to designate the train value.

In Fig. 10–1, if all the shafts are in fixed bearings, the shaft A turns 25 rpm and the sizes of the several gears are such that shaft C makes 150 rpm, the value of the train would be $\frac{150}{25} = 6 = e$. An inspection of the same figure will show that, if A turns right handed, B will turn left handed and C will turn right handed. The direction, then, of C is the same as that of A. The value of this train is then said to be positive and will be indicated by putting a + sign in front of the number which indicates its value. If the number of wheels involved is such that the last shaft turns in the opposite direction from the first shaft, the value of the train will be said to be negative, which fact will be indicated by a − sign in front of the number indicating the train value.

10–5. Calculation of Speeds. Let it be assumed that the gears in Fig. 10–1 have teeth as follows:

D, 100 teeth	F, 125 teeth
E, 50 teeth	G, 25 teeth

It will also be assumed that shaft A makes 25 rpm, and it is required to find the speed of C. Since the speed of B is to the speed of A as the teeth in D are to the teeth in E, the revolutions of B will be equal to $25 \times \frac{100}{50}$; also, since the speed of C is to the speed of B as the teeth in F are to the teeth in G, the speed of $C = 25 \times \frac{100}{50} \times \frac{125}{25} = 250$. Expressing this as a formula,

$$\textit{The speed of the last shaft is equal to the speed of the first shaft} \times \frac{\textit{The product of the teeth of all the drivers}}{\textit{The product of the teeth of all the driven wheels}} \qquad (1)$$

In the pulleys in Fig. 10–2 the principle is the same, except that diameters are used instead of numbers of teeth. Suppose that pulley H is 24 in. in diameter, J 8 in. in diameter, K 36 in. in diameter, and L 12 in. in diameter; then the speed of T will be equal to the speed of $R \times \frac{24 \times 36}{8 \times 12}$; that is, in a train of pulleys:

$$\textit{The speed of the last shaft is equal to the speed of the first shaft} \times \frac{\textit{The product of the diameters of all the driving pulleys}}{\textit{The product of the diameters of all the driven pulleys}} \qquad (2)$$

In a train consisting of a combination of gears and pulleys, as in Fig. 10–3,

$$\textit{The speed of the last shaft is equal to the speed of the first shaft} \times \frac{\textit{The product of diameters and numbers of teeth of all the driving wheels}}{\textit{The product of diameters and numbers of teeth of the driven wheels}} \quad (3)$$

An idle wheel such as gear E in Fig. 10–4 has no effect on the speed ratio, but does cause a change in the direction. This can be seen from the following calculation: Let the wheel D have 100 teeth; E 75 teeth, and F 25 teeth; then the speed of shaft C is equal to the speed of $A \times \frac{100}{75} \times \frac{75}{25}$. Then 75, which is the number of teeth in the idle wheel, appears in both numerator and denominator and cancels out, and therefore the speed of C becomes the speed of $A \times \frac{100}{25}$.

10–6. Driving and Driven Gears Having Coincident Axes. This type of train is sometimes called a *reverted* gear train. Fig. 10–5 is a diagram of the back gear arrangement for a simple cone pulley headstock on an engine lathe. It illustrates the principles involved when two wheels whose axes coincide are connected by a train of wheels through an intermediate shaft, the axis of the intermediate shaft being parallel to the axis of the connected wheels. P is the cone pulley which may run loose on spindle S. A is a gear integral with P and meshing with gear B. C is another gear on the same shaft with B, both B and C being fast to the shaft. C meshes with gear D on the spindle S. From equation (1)

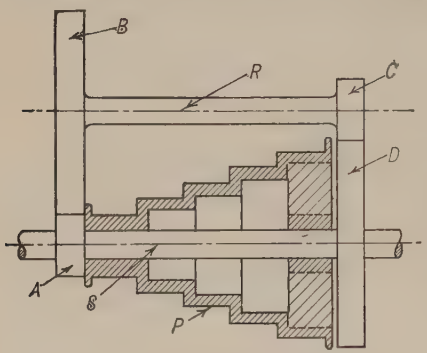

Fig. 10–5

$$\text{Speed of spindle} = \text{Speed of cone pulley} \times \frac{\text{Teeth in } A \times \text{Teeth in } C}{\text{Teeth in } B \times \text{Teeth in } D}$$

Since, however, the shaft R is parallel to S, the gears must be so proportioned that the pitch radius of A + pitch radius of B equals pitch radius of C + pitch radius of D. Consequently, if the pitches of the two pairs are to be in some definite ratio there must be a corresponding relation between the sum of the teeth in A and B and the sum of the teeth in C and D.

10–7. Example of Wheels in Trains. The following paragraphs will give a few examples of wheels in trains. These are selected because they serve to illustrate the principles involved, and not because a knowledge of these particular trains is of special importance.

10–8. Clockwork. A familiar example of the employment of wheels in trains is seen in clockwork. Fig. 10–6 represents the trains of a common clock; the numbers near the different wheels denote the number of teeth on the wheels near which they are placed.

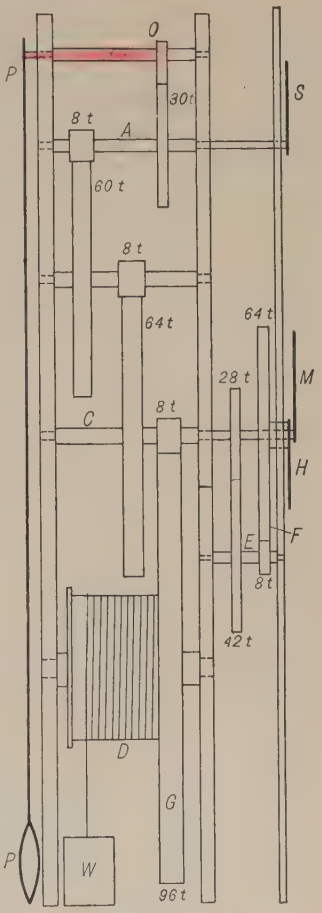

Fig. 10–6

The verge or anchor O vibrates with the pendulum P, and if the pendulum vibrates once per second, it will let one tooth of the escape wheel pass for every double vibration, or every two seconds. Thus the shaft A will revolve once per minute, and is suited to carry the second hand S.

The value of the train between the axes A and C is

$$\frac{\text{Turns } C}{\text{Turns } A} = \frac{8 \times 8}{60 \times 64} = \frac{1}{60}$$

or the shaft C revolves once for 60 revolutions of A; it is therefore suited to carry the minute hand M. The hour hand H is also placed on this shaft C, but is attached to the loose wheel F by means of a hollow hub. This wheel is connected to the shaft C by means of a train and intermediate shaft E. The value of this train is

$$\frac{\text{Turns } H}{\text{Turns } M} = \frac{28 \times 8}{42 \times 64} = \frac{1}{12}$$

The drum D, on which the weight cord is wound, makes one revolution for every 12 of the minute hand M, and thus revolves twice each day. Then, if the clock is to run 8 days, the drum must be large enough for 16 coils of the cord. The drum is connected to the wheel G by means of a ratchet and click, so that the cord can be wound upon the drum without turning the wheel.

Clock trains are usually arranged as shown in the figure, the wheels being placed on shafts, often called "arbors," whose bearings are ar-

ranged in two parallel plates which are kept the proper distance apart by shouldered pillars (not shown) placed at the corners of the plates. When the arbor E is placed outside, as shown, a separate bearing is provided for its outer end.

10–9. Cotton Card Train. Fig. 10–7 shows the train in a cotton carding-machine. For the trains we have the value

$$\frac{\text{Turns } B}{\text{Turns } A} = \frac{135}{17} \times \frac{37}{20} \times \frac{130}{26} \times \frac{17}{33} = +37.84$$

In the machine the lap of cotton passing under the roll A is much drawn out on its passage through the machine, and it becomes necessary to

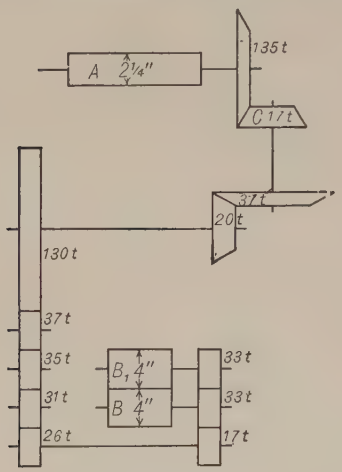

Fig. 10–7

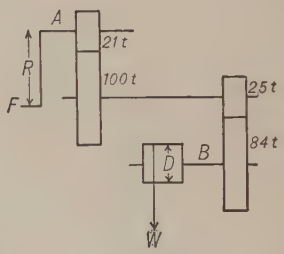

Fig. 10–8

solve for the ratio of the surface speeds of the rolls B and A. For this, since the surface speed equals $2\pi \times$ Turns $\times$ Radius or Turns $\times \pi \times$ Diameter,

$$\frac{\text{Surface speed } B}{\text{Surface speed } A} = \frac{\text{Turns } B \times \text{Diameter } B}{\text{Turns } A \times \text{Diameter } A}$$

$$\therefore \frac{\text{Surface speed } B}{\text{Surface speed } A} = 37.84 \frac{4}{2.25} = 67.27$$

10–10. Hoisting Machine Train. A train of spur gears is often used in machines for hoisting where the problem would be to find the ratio of the weight lifted to the force applied. In Fig. 10–8 the value of the train is

$$\frac{\text{Turns } B}{\text{Turns } A} = \frac{21}{100} \times \frac{25}{84} = \frac{1}{16}$$

then, if $D = 15''$ and $R = 1\frac{1}{4}$ ft,

$$\frac{\text{Speed } W}{\text{Speed } F} = \frac{1}{16} \times \frac{15}{30} = \frac{1}{32}$$

$$\therefore \quad \frac{F}{W} = \frac{\text{Speed } W}{\text{Speed } F} = \frac{1}{32}$$

or if F were 50 lb, W would be 1600 lb *if loss due to friction were neglected.*

10–11. Selective Speed Gear Drives. Many drives consist of gears so arranged as to constitute two or more trains with different train values, any one of which may be used. The different combinations common for this purpose may be roughly classified as follows:

1. First and last members with axes coinciding. Connections made by sliding gears employing one or more intermediate parallel shafts. All shafts in fixed bearings. See Fig. 10–9.

2. Driving and driven shafts parallel. One shaft carries several gears of different sizes, each fast to the shaft and always in mesh with a corresponding gear on the other shaft. Any one of these gears on the second shaft may be made fast to the shaft by a sliding key or clutch.

3. First and last members with axes coinciding. Connections made by employing an intermediate parallel shaft whose bearings may be quickly adjusted to bring the gears into mesh with those on the main axis. See Fig. 10–5.

4. First and last members on parallel axes, one of which carries several gears of different sizes. Connections made by employing a sliding gear on the other axis with an adjustable idler or " tumbler " to complete the train. See Fig. 10–10.

A description of two very common types will serve to illustrate the idea.

10–12. Automobile Transmission. Fig. 10–9 shows in diagrammatic form the arrangement of gears in one type of automobile transmission. Details are not shown, nor is the diagram drawn to scale. The gear A is the main driving gear receiving its motion from the motor through the main clutch. It turns freely on the same axis as the propeller shaft P. Gear D also turns freely on P. Gear F may be caused to slide along P but is keyed to P so that they turn as a unit. K is a clutch which may be caused to slide along P but compels P to turn when it turns. B, C, E, and H are gears which turn as a unit on an axis SS parallel to P. I is a gear in mesh with H and turning on an axis in front of and above SS. A is in mesh with B, and C with D at all times. M is a toothed wheel forming a part of the hub of A, and N a similar wheel forming a part of the hub of D.

The train is in " neutral " in the figure. If the motor is running and the main clutch is " in," so that gear A is connected to the motor, all the gears except F are turning, but the shaft P with gear F and clutch K may be at rest or they may be turning independently of the other gears

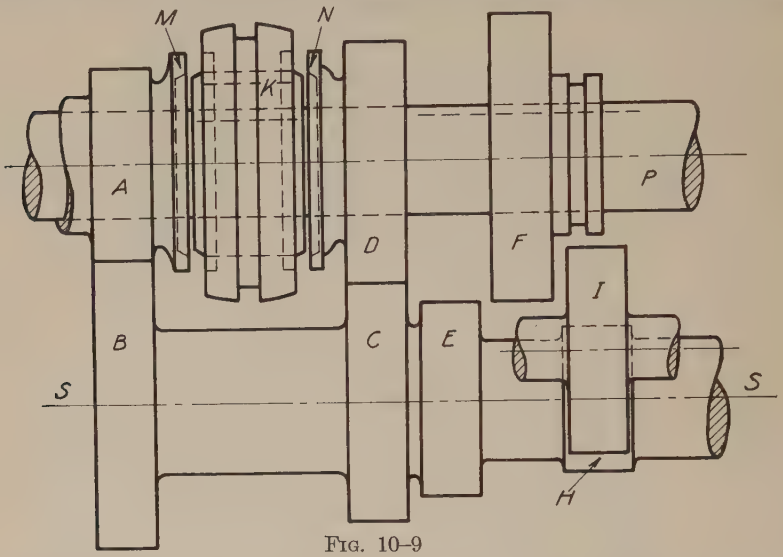

FIG. 10–9

if the car is coasting. Now, if the gear-shifting mechanism is moved so as to slide F along P to the left as seen in the figure, F will come into mesh with E, and since F is keyed to P the drive is now from A to B and from E, which turns with B, to F. Then

$$\frac{\text{Angular speed of } F}{\text{Angular speed of } A} = \frac{\text{Teeth in } A}{\text{Teeth in } B} \times \frac{\text{Teeth in } E}{\text{Teeth in } F}$$

This gives low gear forward.

If the main clutch is thrown out, F put back into neutral position, and clutch K moved to the right as seen in the figure, the conical hub of K will first come in contact with the surface of a conical space inside ring N, thus gradually " synchronizing " the speeds of D and K, that is, connecting D and K through a friction drive so that they have the same speed. A further motion of K toward the right causes it to slide from its central position on its hub, and the teeth in an annular space in K come into mesh with the teeth on the outside of N. This gives the positive drive from A through B, C, and D to P. This is intermediate or second speed forward. We then have

$$\frac{\text{Angular speed of } P}{\text{Angular speed of } A} = \frac{\text{Teeth in } A}{\text{Teeth in } B} \times \frac{\text{Teeth in } C}{\text{Teeth in } D}$$

Moving K to the left connects K directly with A, first synchronizing their speeds in the same manner as K and D were synchronized. A is now connected directly to P through K, and P has the same speed as A. With clutch K in neutral position and gear F moved to the right, F will come into mesh with the idler I, giving the drive from A through B, H, I to F, with the idler I causing F and therefore P to turn in the opposite sense from A. This, therefore, is the reverse or backing gear train.

10–13. Cone of Gears with Adjustable Idler. Fig. 10–10 shows in diagrammatic form an arrangement of gears often used in machine tools, as, for example, in the feed train of a lathe. The shaft S, which may be

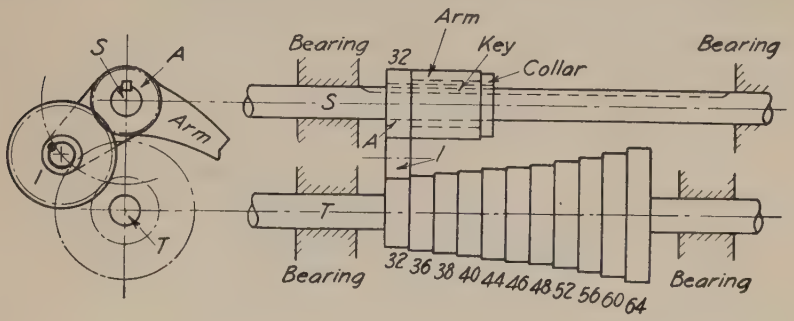

Fig. 10–10

considered as the driving shaft of this train, receives its motion from the lathe spindle through another train. S is provided with a keyway in which fits a key that is fast to gear A. The hub of A turns in a hole in the adjusting arm, a collar being provided at the right to keep the two together. A drives an idler I which turns on a pin carried by the arm, and the unit thus formed may be moved along to a position opposite any one of the cone of gears on T. The axis of the idler is then swung about the axis of S as shown in the left-hand view until I comes into mesh with the cone gear. Since there are eleven gears in the cone it is possible to get eleven different speeds of T for a given speed of S. The train by which S is driven and the train through which T drives the "lead screw" or shaft producing the feed may each be provided with two or more possibilities of speed change. Thus, by using different combinations of the three trains a great variety of speeds may be obtained at the lead screw for one speed of the spindle.

10–14. Trains with Selective Direction. If it is necessary to have the driven shaft turn sometimes in the same direction as the gear which drives it and sometimes in the opposite direction, the train may be so arranged as to control the direction by means of one or more idle gears.

Figs. 10–11 and 10–12 show two ways in which this may be done.

In Fig. 10–11 the power comes to the gear A from a driver on a shaft not shown. B is a bevel gear integral with A, both turning together, loose on the shaft S. B is in mesh with a bevel idler I. D is another bevel gear also loose on the shaft.

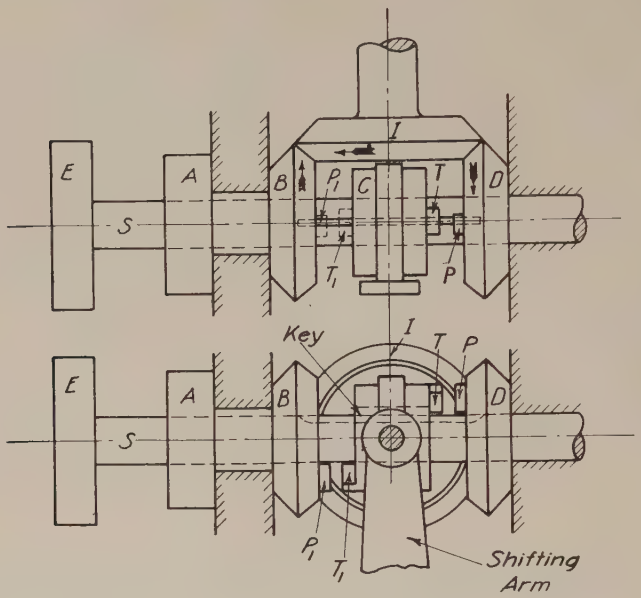

Fig. 10–11

Both B and D have pins P and P_1 projecting beyond their inner ends. Between these bevels is a clutch C which may slide along the shaft on a key so that shaft and clutch must turn together. Pins T and T_1 project on either side of C. All three bevels are turning all the time. If the clutch C is moved to the left the pin T_1 will engage with P_1 and the clutch will be driven by B, thus causing S to turn in the same direction and at the same speed as A and B. In the position shown in the figure the clutch is in mid or neutral position or S is at rest even though the gears B, I, and D may be turning. If the clutch is moved to the right T will engage with P causing S to turn in the same direction as D or opposite B, although at the same speed.

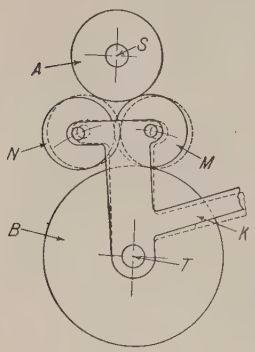

Fig. 10–12

In Fig. 10–12 S is the driving shaft and T the driven shaft. Gear A is fast to S, and gear B is fast to T. An arm K turns loose on T and

may be locked in the desired position by a fastening not shown. This arm carries two idle gears M and N which are in mesh with each other. M is at all times in mesh with B. When K is locked in the position shown in full lines M is also in mesh with A and the drive is from A through M to B thus causing B to turn in the same direction as A. When the arm is locked in the dotted position M is out of mesh with A and N is in mesh with A. The drive is then from A through both N and M to B giving the reversal of direction of B.

10–15. Designing Gear Trains. No definite rules or formulas can be followed in designing a train of gears to have a certain train value. The process is mainly one of " cut and try " until the desired result is obtained. However, certain general lines of attack may be followed; they may best be understood by studying typical problems. If the value of the train is chosen arbitrarily, it may be found impossible to select gears which will give exactly the value called for.

Example 1. Let it be required to select the gears for a train in which the last gear shall turn 19 times while the first gear turns once, the direction of rotation being the same. No gear is to have less than 12 nor more than 60 teeth.

Solution. The first step in the solution of this problem is the determination of the number of pairs of gears necessary to give a train value of 19 and keep the gears within the limits of size specified. If only one pair were used, making the driver as large as allowed, that is, 60 teeth, and the driven gear as small as allowed, that is, 12 teeth,

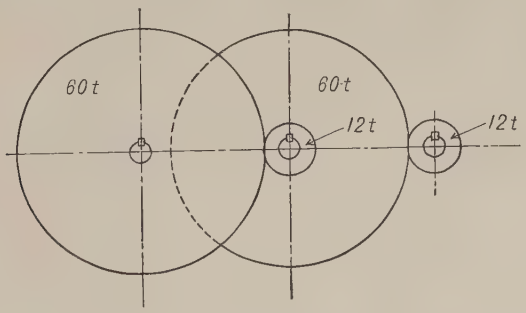

Fig. 10–13

the train value would be $\frac{60}{12}$ or 5. If a second driver of 60 teeth is made fast to the 12 teeth gear, and this drives a second gear of 12 teeth, as shown in Fig. 10–13, the train value becomes $\frac{60}{12} \times \frac{60}{12} = 25$. This is greater than the assigned value of 19; therefore, two pairs of gears will be sufficient to obtain a value of 19 without exceeding the specified limits of size. The number of gears necessary having thus been determined, the next step is the selection of the gears themselves to give the exact value of 19. This may be tried in several ways. First, since two pairs of gears are to be used, the square root of 19 may be taken. This is approximately 4.36. This does not differ greatly from $4\frac{1}{3}$. Now

$$\frac{4\frac{1}{3}}{1} \times \frac{19}{4\frac{1}{3}} = 19$$

Multiply both numerator and denominator of the first fraction by 12, and of the second fraction by 3, and the equation becomes

$$\frac{52}{12} \times \frac{57}{13} = 19$$

Therefore, a train of gears as shown in Fig. 10–14 will give the required train value of 19. If the directional relation were not correct an idler might be used.

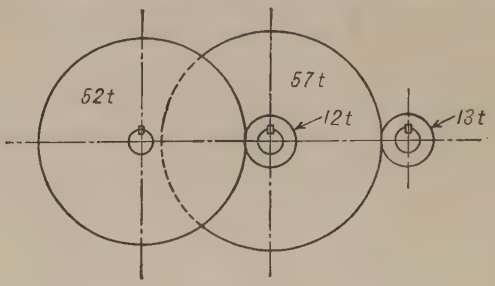

FIG. 10–14

Example 2. Two shafts S and Z are to be connected by a train of gears such that S shall make 7 turns while Z makes 2 turns. To find the proper sizes of gears using no gear of more than 45 nor less than 15 teeth.

Solution. S being considered as the driver, the train value of e_{SZ} is $\frac{2}{7}$; and, since the minimum ratio of $\frac{\text{Teeth of driver}}{\text{Teeth of follower}}$ is $\frac{15}{45}$ or $\frac{1}{3}$, two pairs of gears will be required. Break up $\frac{2}{7}$ into two factors. Try

$$\frac{2}{3} \times \frac{3}{7} = \frac{T_A}{T_B} \times \frac{T_C}{T_D}$$

Multiply numerator and denominator of the first fraction by 8 since no gear can be less than 15. This gives

$$\frac{T_A}{T_B} = \frac{16}{24}$$

Multiply numerator and denominator of the second fraction by 5, giving

$$\frac{T_C}{T_D} = \frac{15}{35}$$

Example 3. To design a train of four gears, with the axis of the last wheel coincident with the axis of the first wheel as in Fig. 10–5. The train value to be $\frac{1}{12}$. No gear to have less than 12 teeth. All gears to be of the same pitch.

Solution. Since there are two pairs in the train, the value $\frac{1}{12}$ must be separated into two factors, and it is desirable to have these factors as nearly as may be of the same value. The square root of $\frac{1}{12}$ is between $\frac{1}{3}$ and $\frac{1}{4}$, so a trial pair of factors may be taken $\frac{1}{3} \times \frac{1}{4}$. Then letting the letters T_a, T_b, T_c, T_d represent the numbers of teeth in the gears A, B, C, D, respectively (Fig. 10–5),

$$\frac{T_a}{T_b} \times \frac{T_c}{T_d} = \frac{1}{3} \times \frac{1}{4}$$

Now, since the pitches are all alike,

$$T_a + T_b = T_c + T_d \quad \text{(See § 10–6.)}$$

Let Z represent this sum. Then a value must be chosen for Z such that it may be broken up into two parts whose ratio is $\frac{1}{3}$ and also two parts whose ratio is $\frac{1}{4}$.

If Z is made equal to the least common multiple of $1 + 3$ and $1 + 4$, the condition will be satisfied. This L. C. M. is 20. Then $\frac{T_a}{T_b}$ would be $\frac{5}{15}$ and $\frac{T_c}{T_d}$ would be $\frac{4}{16}$.

But these values are too small for the numbers of teeth in the gears. Then numerator and denominator of both fractions must be multiplied by some number such that no number will be less than the number of teeth allowed in the smallest gear. In this case multiplying $\frac{5}{15}$ and $\frac{4}{16}$ each by $\frac{3}{3}$ gives $\frac{15}{45}$ and $\frac{12}{48}$.

Therefore, T_a may be 15, $T_b = 45$, $T_c = 12$, $T_d = 48$.

The above method (Example 3) may be expressed as follows:

When both pairs have the same pitch.

If $\frac{t_1}{t_2} \times \frac{t_3}{t_4}$ are the factors of e (i.e., the train value) expressed in lowest terms, then $T_a + T_b$ and $T_c + T_d$ must be made equal to the L. C. M. of $t_1 + t_2$ and $t_3 + t_4$ or to some multiple of the L. C. M.

When the pitches of the two pairs are different.

The case illustrated in Example 3 is not a practical one, because the stresses on the second pair of gears are always greater, requiring a greater circular pitch.

If the diametral pitch of A and $B = P_1$ and the diametral pitch of C and $D = P_2$, and if $\frac{p_1}{p_2} = \frac{P_1}{P_2}$ reduced to its lowest terms, then $T_a + T_b$ is made equal to the L. C. M. of $t_1 + t_2$ and $t_3 + t_4$ (or to some multiple of the L. C. M.) multiplied by p_1, and $T_c + T_d$ is made equal to the L. C. M. (or the same multiple of the L. C. M.) multiplied by p_2.

10–16. Epicyclic Trains. An epicyclic train of gears is a train in which part of the gear axes are moving relative to some one of the axes which is the reference or fixed axis. In other words, the arm (see § 10–4), instead of being fixed, is turning about the axis of one of the gears of the train.

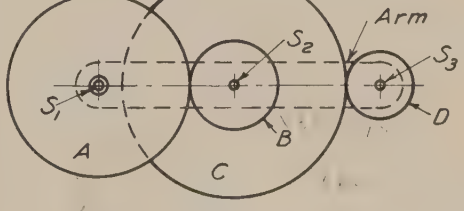

FIG. 10–15

In Fig. 10–15 assume the axis S_1 to be fixed and the gear A to be turning about S_1 at an angular speed of m rpm. The arm carries the axes S_2 and S_3. The gears B and C are attached to each other so that they move as a unit. Assume the arm to be turning about the axis S_1

at an angular speed of a rpm. Then the angular speed n of the gear D is caused in part by the turning of A and in part by the gear B rolling around A as the arm turns. Therefore n is a function of m, a, and the train value e_{AD}.

In the following discussion absolute speed or absolute turns means the speed or number of turns relative to the frame which supports the axis assumed to be fixed, while relative speed or relative turns means the speed or number of turns relative to the arm. It must be remembered that relative speed is not a ratio but an algebraic difference. For example, if the wheel A, Fig. 10–15, has a speed of 50 rpm right handed and the arm has a speed of 30 rpm right handed, the speed of A relative to the arm is $50 - 30 = 20$ rpm right handed. Again, if A is turning 50 rpm right handed and the arm 30 rpm left handed, the speed of A relative to the arm is $50 - (-30) = 80$ rpm right handed. Either sense of rotation may be assumed as positive (+), but a sense having been chosen as positive, the reverse sense must be treated as negative (−). In designating the train value and speeds or number of turns in a given time by the letters e, m, n, a, etc., the plus or minus sign is understood to be included in all cases.

10–17. Tabulation of Speeds. The absolute speeds of the several gears in an epicyclic train may be determined by tabulating the speed which each has, first as the result of turning the arm, second of turning one of the wheels whose speed is known. The algebraic sum of the two tabulations gives the resulting absolute speed of the members.

Referring to Fig. 10–15, let A turn about the fixed axis S_1 at a speed of 50 rpm right handed (R.H.), and let the arm turn about the same axis 30 rpm left handed (L.H.). The numbers of teeth in the gears are as follows: $A = 60$, $B = 30$, $C = 60$, $D = 15$. To find the absolute speed of D and of the unit B and C. First assume all the gears locked to the arm so that there can be no relative motion, and give to the arm its required number of turns. Since all the gears are locked to the arm, all must turn the same number of times. Write this down in tabular form as in the first line of the following table. Then unlock the gears, hold the arm fixed, and turn the gear A whose speed is known to be 50 R.H. enough times to cause its final motion to be +50. Since A has already turned −30 it must be turned +80 more to equal +50. The train value between A and B (e_{AB}) is $-\frac{60}{30} = -2$. Hence B and C will turn $80\ (-2) = -160$. The train value between A and D is e_{AD} and is equal to $+\frac{60}{30} \times \frac{60}{15} = +8$. Hence D will turn $80 \times 8 = 640$. Write these values in the second line of the table as shown, and add the several columns. The result shows that the arm turns −30 and A turns +50 as required, causing B and C to turn −190 and D to turn +610.

	Arm	A	B and C	D
Train locked	−30	−30	−30	−30
Arm fixed	0	+80	−160	+640
	−30	+50	−190	+610

10–18. Formula for Speeds. A simple formula may be derived to determine the unknown speeds in an epicyclic train. Referring still to Fig. 10–15, let m, a, and n_D represent the speeds of A, the arm, and D respectively. Let e_{AD} represent the train value between A and D, considering A as the first wheel of the train.

As stated in § 10–4

$$e_{AD} = \frac{\text{Speed of last wheel relative to arm}}{\text{Speed of first wheel relative to arm}} \tag{I}$$

But from § 10–16 the speed of the last wheel D relative to the arm is $n_D - a$, and the speed of the first wheel A relative to the arm is $m - a$. Putting these values in (I) gives

$$e_{AD} = \frac{n_D - a}{m - a} \tag{4}$$

Using the same data as in the preceding article we have $e_{AD} = +8$, $m = +50$, $a = -30$. Substituting these values in equation (4) gives

$$8 = \frac{n_D - (-30)}{50 - (-30)}$$

Solving for n_D, we get $n_D = +610$, which agrees with the result obtained by the tabulation method. Similarly, if n_B represents the speed of B and C, we have

$$e_{AB} = -2,\ m = +50,\ a = -30, \text{ or}$$

$$-2 = \frac{n_B - (-30)}{50 - (-30)}$$

Hence $n_B = -190$.

10–19. Solution by Vectors. The angular speeds of the members of an epicyclic train may be found by means of velocity vectors. Such a solution is likely to be awkward and much less simple than solution by the tabular method or the formula. It does, however, have some value in helping one to visualize the action of the gears. In Fig. 10–16 the arm carries the axes T and Z. The train consists of the gear A, the unit B and C, and the gear D. The arm turns about the fixed axis S. Let m, n, and a represent the angular speed in radians of A, D, and the arm

respectively, and let R_A, R_B, R_C, and R_D be the pitch radii of the respective gears. Let the axes S, T, and Z lie on a straight line. At the pitch point P draw the vector $Pp_1 = mR_A$ in the proper sense accord-

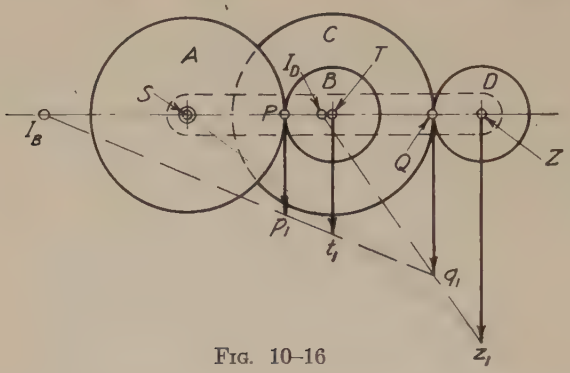

Fig. 10–16

ing as A turns right or left handed. Draw the vector $Tt_1 = a\ (R_A + R_B)$. Draw a line through t_1 and p_1 intersecting the center line ZTS at I_B. Then I_B is the instantaneous axis of the two gears B and C. Extend I_Bt_1 to intersect at q_1 a perpendicular to SZ drawn at the pitch point Q. Then Qq_1 is the velocity of Q. Draw Zz_1 perpendicular to SZ and equal to $a\ (R_A + R_B + R_C + R_D)$. Draw z_1q_1 intersecting SZ at I_D giving I_D as the instantaneous axis of D.

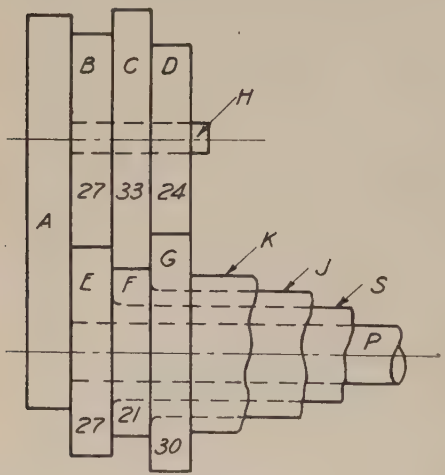

Fig. 10–17

Then the angular speed of $D = n = \dfrac{Zz_1}{ZI_D}$; also

$$n = \frac{Qq_1}{QI_D}$$

10–20. Reverted Epicyclic Trains. In Fig. 10–17 the arm A, fast to the shaft P, carries a stud H on which turn freely the three gears B, C, and D. These gears are attached to each other so that they turn as a unit. A gear E is attached to a sleeve S free to turn on P. Gear F is fast to a sleeve J free to turn on S. Gear G is fast to a sleeve K free to turn on J. B and E each have 27 teeth, F has 21, G has 30, C has 33, and D has 24. The arm A is the driver, and either one of the gears

F or G may be held from turning by applying a brake to either J or K. There are then two epicyclic trains. One has F as the first wheel, C and B the intermediate wheels, and E the last wheel. The other has G as the first wheel D and B the intermediate wheels, and E the last wheel.

The numbers on the figure indicate the number of teeth in the gears. Let a, n_E, m_F, and m_G represent the angular speeds of A, E, F, and G respectively. Let $a = +1$. To find n_E when F is held from turning.

To use equation (4), $e_{FE} = +\frac{21}{33} \times \frac{27}{27} = +\frac{7}{11}$, $a = +1$ and $m_F = 0$.

Then
$$\frac{7}{11} = \frac{n_E - 1}{0 - 1}$$

whence
$$n_E = +\frac{4}{11}$$

Since the sign of n_E in this case is plus and a was assumed positive, E is turning $\frac{4}{11}$ as fast as A and in the *same* sense. Again let F be free to turn and hold G from turning. Then $e_{GE} = +\frac{80}{24} \times \frac{27}{27} = +\frac{5}{4}$ and $m_G = 0$. Therefore

$$\frac{5}{4} = \frac{n_E - 1}{0 - 1}$$

Hence
$$n_E = -\frac{1}{4}$$

That is, with G held from turning, E turns one-quarter as fast as A and in the opposite sense. This was the arrangement of gears used in the former Model T Ford automobile to give the low gear forward and the reverse drive.

10–21. Examples of Epicyclic Trains. The following examples show some typical epicyclic trains and further illustrate the application of the formula in the solution of problems.

Example 4. In Fig. 10–18 let gear B have 24 teeth and C 18 teeth. If B is held from turning and the arm makes 1 turn right handed, let it be required to find how many absolute turns C makes.

Solution. Using equation (4), $m = 0$, $e = -\frac{24}{18} = -\frac{4}{3}$, $a = +1$ (assuming right-hand rotation is plus). Then, substituting in equation (4) and solving gives $n = \frac{7}{3}$.

Example 5. In Fig. 10–19, E is an annular gear which cannot turn, being fast to the frame of the machine. The arm A turns about the shaft S which is also the axis of the gears B and E. B has 24 teeth, C 20 teeth, D 16 teeth, and E 96 teeth. Let it be required to find the speed of the arm A to cause the gear B to have a speed of 75 rpm left handed.

Solution. Assume B to be the first wheel of the train and assume right-handed rotation as $+$:

Then referring to equation (4), $n = 0$, $m = -75$, $e = +\frac{24}{96} = +\frac{1}{4}$.

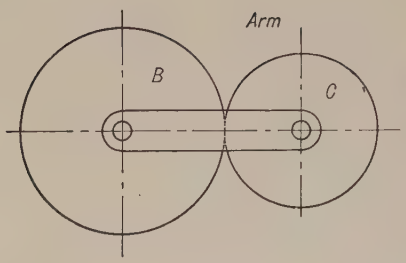

FIG. 10–18

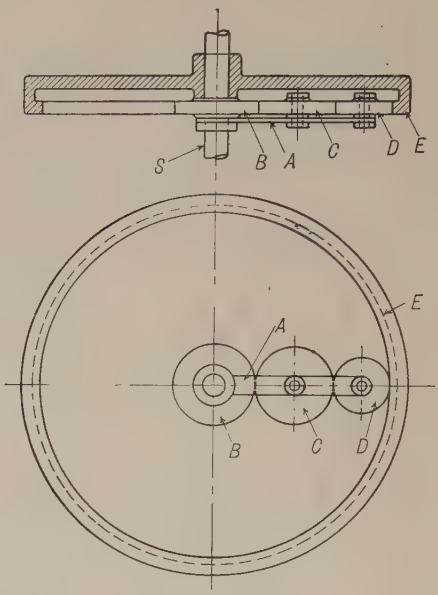

FIG. 10–19

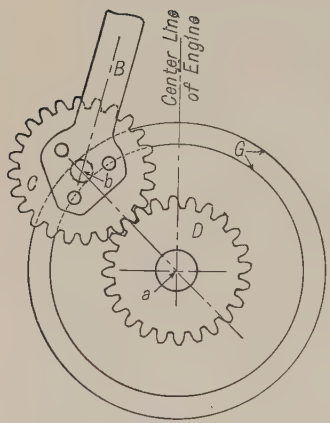

FIG. 10–20

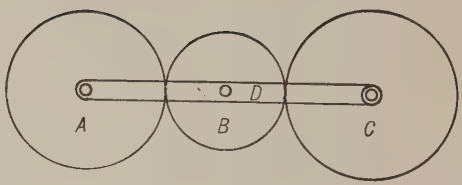

FIG. 10–21

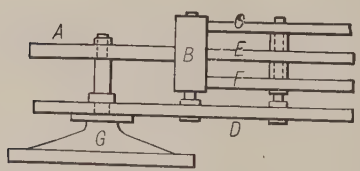

FIG. 10–22

Substituting these values in the equation and solving gives

$$a = +25$$

Therefore, A will have to have a speed of 25 rpm right handed to give the required speed to B.

Example 6. *Sun and Planet Wheel.* Fig. 10–20 shows an application of the two-wheel epicyclic train known as the **sun and planet wheels,** first devised by James Watt to avoid the use of a crank, which was patented. In his device the epicyclic train arm was replaced by the stationary groove G, which kept the two wheels in gear. a represents the engine shaft, to which the gear D was made fast, B the connecting rod, attached to the walking beam. The gear C was rigidly attached to the end of the connecting rod. Although with such an arrangement it is not strictly true that the gear C does not turn, yet its action on the gear D for the interval of one revolution of the epicyclic arm (that is, the line joining the centers of D and C) is the same as though C did not turn, since the position of C at the end of one revolution of the arm is the same as at the beginning.

Let it be assumed that the gears C and D have the same number of teeth.

Then the train value $= -1$. Let the arm ab make one turn.

Required to find the turns of D and therefore of the engine shaft.

Let m represent the turns of D, a the turns of the arm, n the turns of C.

Solution. From equation (4)

$$-1 = \frac{0 - 1}{m - 1}$$

whence

$$m = +2$$

That is, the engine shaft will make two turns every time the gear C passes around it.

Example 7. In the three-wheeled train, Fig. 10–21, let A have 55 teeth and C have 50. A does not turn. To find the turns of C while the arm D makes $+10$ turns.

Solution. Using equation (4)

$$\frac{11}{10} = \frac{n - 10}{0 - 10}$$

$$n = -1$$

Or the wheel C turns -1 while the arm D turns $+10$.

If the gear C in Fig. 10–21 were given the same number of teeth as A, it would not turn at all. If there were more teeth in C than in A its resultant number of turns would be in the same direction as the arm.

Example 8. *Ferguson's Paradox.* In the device shown in Fig. 10–22, known as Ferguson's paradox, all three of the cases referred to in Example 7 occur in one mechanism.

Let the gear A have 60 teeth, C 61 teeth, E 60 teeth, F 59 teeth. B is an idle wheel connecting each of the others with A. The arm D turns freely on the axis of A and carries the axis which supports the other gears. A is fixed to the stand and therefore cannot turn. If the arm D is given one turn R.H. (+), required to find the turns of C, E, and F.

Solution. By treating this as three separate trains and applying the formula to each C will be shown to turn $+\frac{1}{60}$, $F = -\frac{1}{59}$, $E = 0$.

Example 9. *Triplex Pulley Block.* Fig. 10–23 shows a vertical section and side view, with part of the casing removed, of a triplex pulley block. S is the shaft to which the hand chain wheel A is keyed. Also keyed to S is the gear F meshing with the two gears E. The gears E turn on studs T which are carried by the arm B, the latter being keyed to the hub of the load chain wheel G. The gears C are integral with E and mesh with the annular D which is a part of the stationary casing. The

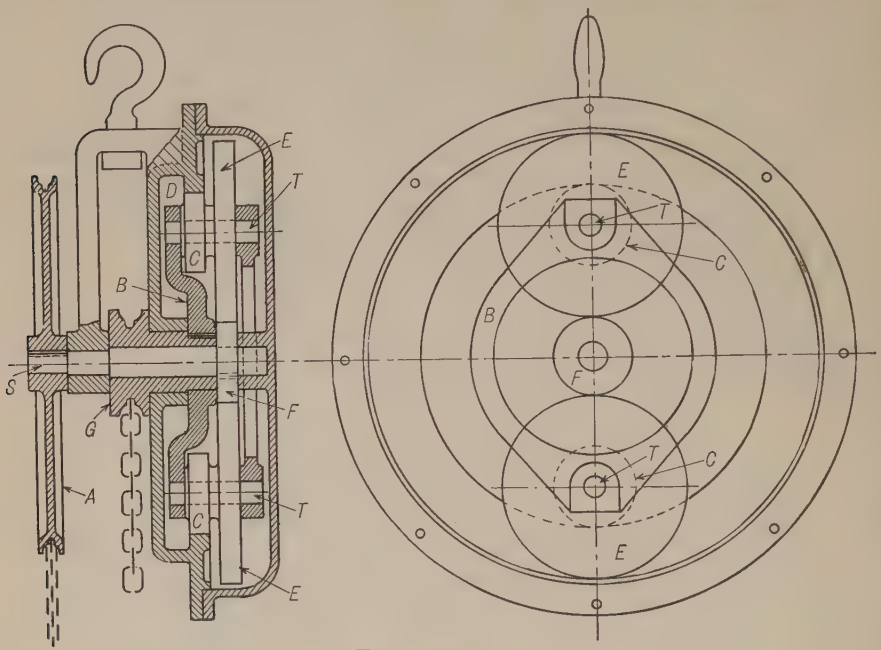

Fig. 10–23

mechanism is an epicyclic train. F is the first wheel of the train and has a speed imparted to it by the turning of the hand chain wheel A. The annular D is the last wheel of the train and does not turn. The train value is

$$-\frac{\text{Teeth in } F}{\text{Teeth in } E} \times \frac{\text{Teeth in } C}{\text{Teeth in } D}$$

Assuming one turn of A, the turns of the arm B may be found, and, therefore, the turns of G. Hence, the angular speed of A and its diameter and the angular speed of G and its diameter being known, the relative linear speeds of the hand chain and the load chain can be calculated. The load will then be to the force exerted on the hand chain as the speed of the hand chain is to the speed of the load chain, friction being neglected.

10–22. Epicyclic Bevel Trains. Fig. 10–24 represents a common form of epicyclic bevel train, consisting of the two bevel wheels D and E attached to sleeves free to turn about the shaft extending through them. This shaft carries the cross at F which makes the bearings for

the idlers *GG* connecting the bevels *D* and *E* (only one of these idlers is necessary, although the two are used to form a balanced pair, thus reducing friction and wear). The shaft *F* may be given any number of turns by means of the wheel *A*, at the same time the bevel *D* may be turned as desired, and the problem will be to determine the resulting motion of the bevel *E*. The shaft and cross *F* here correspond with the arm of the epicyclic spur-gear trains.

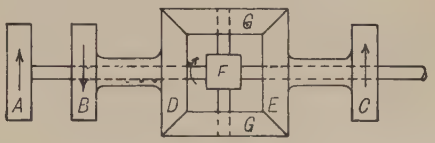

FIG. 10–24

When the bevels are arranged in this way the wheels *D* and *E* must have the same number of teeth, and the train value is -1. It will be found clearer in these problems to assume that the motion is positive when the nearer side of the wheel moves in a given direction, say upward, in which case a downward motion would be negative; or if a downward motion is assumed as positive, then upward motion would be negative.

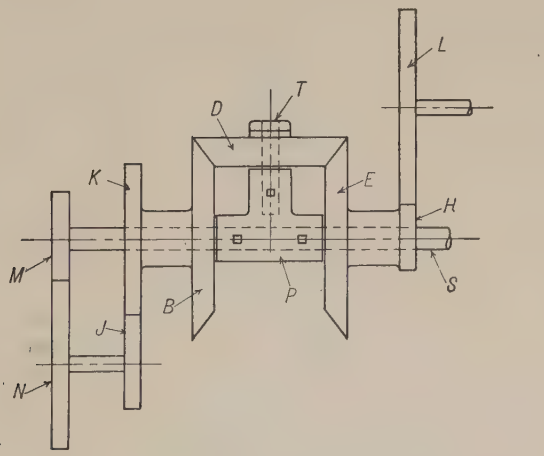

FIG. 10–25

Example 10. In Fig. 10–25, *B* and *E* are two bevel gears running on shaft *S*, but not fast to it. Attached to the collar *P*, which is set screwed and keyed to *S*, is a stud *T* on which turns freely the gear *D* meshing with *B* and *E*. *B* and *E* are of the same size. *J* is a gear having 25 teeth and driving the 40-tooth gear *K* which is fast to *B*. *L* is a 51-tooth gear driven by the 17-tooth gear *H* which is fast to *E*. *N* is a 45-tooth gear fast to the same shaft as *J* and drives the 20-tooth gear *M* which is fast to *S*. It is required to find the speed of *L* if *J* makes 40 rpm.

Solution. The first step is to pick out those gears which are a part of the epicyclic train. These are evidently B, D, and E. The epicyclic arm is T. Assume B as the first wheel of the epicyclic train, E the last wheel. Let m represent the speed of B, n the speed of E, a the speed of S, and e the train value between E and B. Also assume direction in which J turns as positive.

$$e = -1$$
$$m = -\tfrac{25}{40} \times 40 \text{ rpm} = -25 \text{ rpm}$$
$$a = -\tfrac{45}{20} \times 40 = -90$$

Then, substituting in equation (4)

$$n = -155 \text{ rpm} = \text{speed of } E$$
$$\text{Speed of } L = -155 \times (-\tfrac{17}{51}) = 51\tfrac{2}{3}$$

Therefore, L has a speed of $51\frac{2}{3}$ rpm in the same sense as J.

Example 11. *Bevel Gear Differential.* Fig. 10–26 shows the arrangement of gears in the differential of an automobile. Shaft S is driven from the motor and has keyed to it the bevel gear D meshing with E which turns loosely on the hub of the gear H, which is keyed to the axle of the left wheel. E has projections on it which carry the studs T furnishing bearings for the gears R. There are several of these

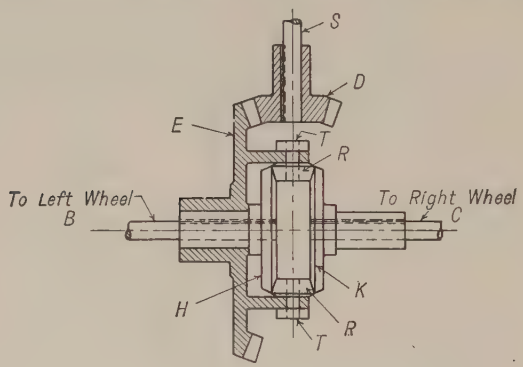

Fig. 10–26

gears in order to distribute the load. The gears R mesh with H which is, as has been said, fast to the axle of the left wheel, and with K which is fast to the axle of the right wheel. When the automobile is going straight ahead, D drives E and all the other gears revolve as a unit with E without any relative motion. As soon, however, as the car starts to turn a corner, say toward the right, the left wheel will have to travel further, and therefore the shaft B must turn faster than C. Then the gears begin to move relative to each other, the action being that of an epicyclic train.

Let it be assumed that the right wheel is jacked up so that the axle C and gear K may turn freely, while the left wheel remains on the ground and is held from turning, thus holding gear H from turning. Consider H as the first wheel of the train, E being the arm. Required to find the turns of C for one turn (+) of E.

Solution. Using equation (4)

$$-1 = \frac{n - 1}{0 - 1}$$

whence $n = 2$. That is, the right wheel will turn twice as fast as the gear E.

Example 12. *Water-Wheel Governor.* An epicyclic bevel train has been used in connection with a train containing a pair of cone pulleys, in a form of water-wheel governor for regulating the supply of water to the wheel. Fig. 10–27 is a diagram for this train, the position of the belt connecting the cone pulleys being regulated by a ball governor connecting by levers with the guiding forks of the belt. The governor

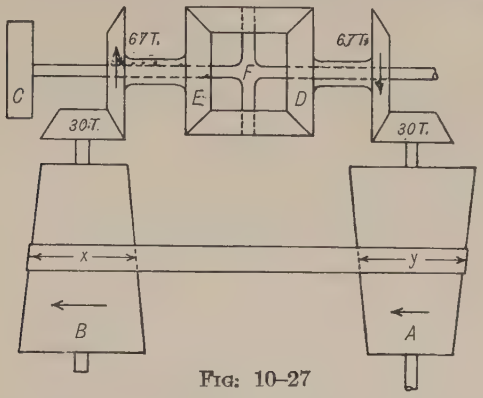

FIG. 10–27

is so regulated that when running at the mean speed the belt will be in its mid position, at which place the turns of E and D should be equal, and opposite in direction, in which case the arm F will not be turning. If the belt moves up from its mid position, and if A turns as shown, the arm F will turn in the same direction as the wheel E.

With the numbers of teeth as shown in the figure, let it be required to find the ratio of the diameters $\frac{y}{x}$ if C is to turn downward once for 25 turns of A in the direction shown; also to determine whether the belt shall be crossed or open.

Solution. Let E be considered as the first wheel of the train.

Then,
$$n = \text{turns } A \times \frac{30}{67} = 25 \times \frac{30}{67} \text{ downward } (+)$$

$$e = -1, \qquad a = 1$$

$$m = \text{turns } A \times \frac{y}{x} \times \frac{30}{67} = 25 \times \frac{30}{67} \times \frac{y}{x}$$

Then, substituting in equation (4)

$$-1 = \frac{25 \times \frac{30}{67} - 1}{25 \times \frac{30}{67} \times \frac{y}{x} - 1}$$

or
$$\frac{y}{x} = -\frac{25 \times \frac{30}{67} - 2}{25 \times \frac{30}{67}} = -\frac{308}{375}$$

The minus sign in this value of $\frac{y}{x}$ signifies that the value m (in which $\frac{y}{x}$ first ap-

pears) must be negative; that is, E must turn in the opposite direction from D. Hence the cone B must turn in the same direction as A and the belt must be open.

Example 13. The bevel train may be a *compound train*, as shown in Fig. 10–28. Here the train value, instead of being -1, is $-\frac{125}{42} \times \frac{28}{15} = -\frac{50}{9}$, if E is considered as the first wheel.

Letting m represent the turns of E, n the turns of D, and a the turns of the arm (same as of C), using equation (4), and assuming A to make $+40$ turns and B to make -10 turns,

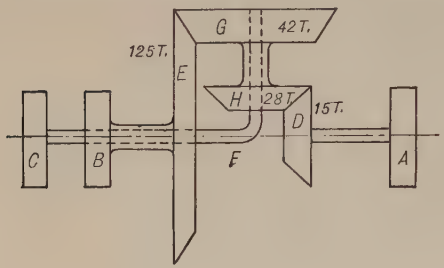

Fig. 10–28

$$-\frac{50}{9} = \frac{40 - a}{-10 - a}$$

whence

$$a = -\frac{140}{59}$$

Or C will turn $\frac{140}{59}$ times in the same direction as B and E.

Example 14. *Double Epicyclic Bevel Train.* In Fig. 10–29 is shown a train of bevel gears which may best be solved by treating it as two epicyclic trains. The

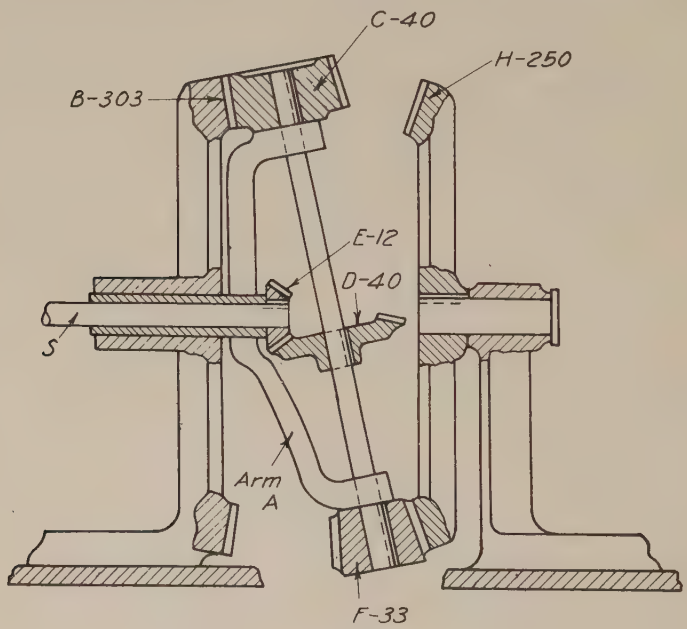

Fig. 10–29

train $EDCB$ causes the arm to turn, and the arm, through the train $BCFH$, causes H to turn.

B is fast to the frame and so cannot turn. E is fast to the driving shaft S. Let the turns of $E = m = 1$. The train value from E through D and C to B is

$$-\frac{12}{40} \times \frac{40}{303} = -\frac{4}{101}, \quad n_B = 0$$

Then

$$-\frac{4}{101} = \frac{0 - a}{1 - a}$$

whence

$$a = \frac{4}{105}$$

Using the train $BCFH$ with B as the first wheel

$$e_{BH} = \frac{303}{40} \times \frac{33}{250} = \frac{9999}{10{,}000}$$

$$m_B = 0$$

$$a = \frac{4}{105}$$

as found above. Then

$$\frac{9999}{10{,}000} = \frac{n_H - \frac{4}{105}}{0 - \frac{4}{105}}$$

whence

$$n_H = \frac{1}{262{,}500}$$

Therefore E must turn 262,500 times to turn H once.

PROBLEMS

X–1. Considering as the driver, the shaft which carries the minute hand of a clock, what is the train value in each of the following cases:

(*a*) Between the minute-hand shaft and the sleeve to which the hour hand is attached?

(*b*) Between the minute-hand shaft and the second-hand shaft?

X–2. Shaft A turns 120 rpm in the direction shown and drives shaft B by means of an open belt running on the right-hand steps of the pulleys. Shaft C is driven from B by a pair of gears so that C turns 3 times for every 2 turns of B. Gear D has 26 teeth while E has 78 teeth. Shaft F carries a bevel gear of 12 teeth which drives one of 120 teeth on shaft G. Shaft G also carries H, a 4-pitch, 16-tooth gear which is in mesh with a sliding rack. What is the speed of the rack in inches per minute and does it move to the right or left?

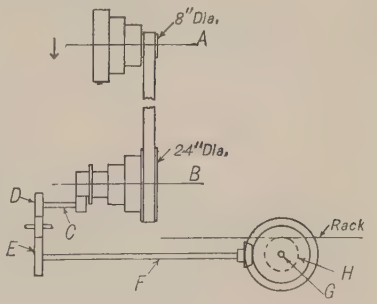

PROB. X–2

X–3. In a broaching machine, the shaft A carries a pulley 24 in. in diameter which is driven by a belt from a 12-in. pulley on the countershaft overhead, the latter turning 150 rpm. The gears B and D have 12 teeth each, while C and E have 60 teeth. Gear E is fast to F, which has 10 teeth and a circular pitch of 1.047 in. and which engages with rack G to which is attached the broach. Find the speed with which the broach is drawn through the work in inches per minute.

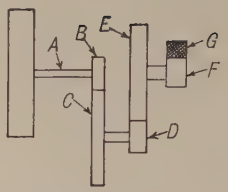

Prob. X–3

X–4. In a brick-making machine is found this train of gears. A motor carrying pulley E, which is 6 in. in diameter, drives the machine. The wide-faced roller F, 12 in. in diameter, drives a conveyor belt. If the motor runs at 1200 rpm, what is the speed of the conveyor belt in feet per minute? (Neglect the thickness of the belt.)

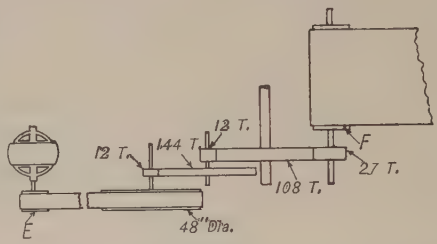

Prob. X–4

X–5. In a crane, the chain barrel is driven by a motor on the spindle of which is keyed a pinion of 14 teeth. This gears with a wheel of 68 teeth keyed to the same spindle as a pinion of 12 teeth. The last wheel gears with a wheel of 50 teeth keyed to the same spindle as a wheel of 25 teeth, and the latter gears with a wheel of 54 teeth keyed to the chain barrel spindle. Chain barrel is $16\frac{1}{2}$-in. in pitch diameter. Sketch the arrangement and find the number of revolutions per minute of the motor when 20 ft of chain are wound on the drum per minute.

X–6. Sketch shows side elevation of a molding machine. The stock is fed through rolls A to cutter C which is driven by a quarter turn belt as shown. Rolls A are $4\frac{1}{2}$ in. in diameter, the upper one only being power driven. If the cutter C is 6 in. in diameter, find the feed of the stock per revolution of cutter and the relative speed of cutter and work. (Cutter is shown behind the work.)

Assume cutter makes 1 rpm.

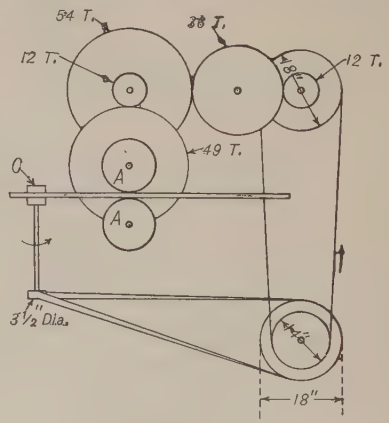

Prob. X–6

X–7. A is an annular gear having 77 teeth, driving pinion B having 12 teeth. Numbers of teeth on the other gears are as given in the figure. If A makes 15 rpm, find the rate of slip between the cylinders R and S in feet per second.

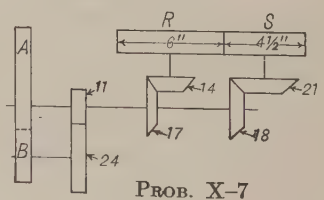

Prob. X–7

X–8. An annular gear A on a shaft S_1 has 100 teeth and drives a pinion B, having 15 teeth, fast to a shaft S_2. Fast to shaft S_2 is also a 75-tooth gear C which drives a 20-tooth gear E on shaft S_3. Fast to S_3 is a gear F of 144 teeth driving a gear H on shaft S_4. The axis of S_4 is in line with the axis of S_1. All shafts are parallel and in the same plane.

(*a*) Make a freehand sketch of the train.

(*b*) How many teeth must the gear H have if all gears are of the same pitch?

(*c*) If S_1 is the driving shaft, what is the value of the train and is it + or −?

(*d*) If the gears are 5 diametral pitch, what is the distance between the axes of S_1 and S_3?

X–9. A is a double-threaded worm, on shaft S. B the worm wheel having 53 teeth. The rest of the gears in the train are spur gears having teeth as follows:

$$C - 82, \quad D - 64, \quad E - 74, \quad H - 23$$

Through what angle does shaft T turn while shaft S makes 1 turn?

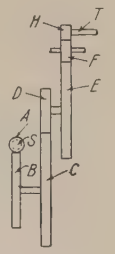

PROB. X–9

X–10. Referring to Fig. 10–10, the figure beside each gear indicates the number of teeth.

Calculate and make a table of all the possible values of the ratio

$$\frac{\text{Angular speed of } T}{\text{Angular speed of } S}$$

X–11. A has 20 teeth, B 80 teeth, E 30 teeth. While S_1 makes 5 turns, S_2 makes $2\frac{2}{3}$ in the same direction. How many teeth on C? Are 1 or 2 idle wheels needed between C and E?

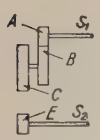

PROB. X–11

X–12. $\dfrac{\text{Speed } S_3}{\text{Speed } S_1} = \dfrac{2}{15}$, and the shaft S_2 is halfway between S_1 and S_3. Find the proper numbers of teeth for the different gears. Show where each should be. Have the same pitch on all gears. Keep numbers of teeth as low as may be but not under 12. Have ratio of the pairs as nearly alike as may be.

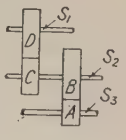

PROB. X–12

X–13. A reverted train of four gears is to give a reduction in the ratio of 2 to 7. Arrange a train to give this, using no wheel of less than 15 teeth. First pair of gears 4-pitch, second pair 3-pitch. Make reduction of speed by the two pairs as nearly equal as possible.

X–14. $\dfrac{\text{Revolutions } B}{\text{Revolutions } A} = \dfrac{19}{1}$; find suitable numbers of teeth for the four gears of this train, having all of the same pitch. No gear to have more than 75 teeth nor less than 10 teeth.

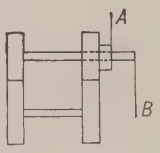

PROB. X–14

X–15. Shaft S has a constant speed of 100 rpm. Gears F, G, and H form a unit free to slide, but not to turn on shaft S_1. S_1 is to have speeds of 20, 200, and 860 rpm. Gear H has 80 teeth. Find numbers of teeth on all gears if they are all of the same pitch, and if gears A and B are equal. The slowest speed of S_1 is when E and H are in mesh.

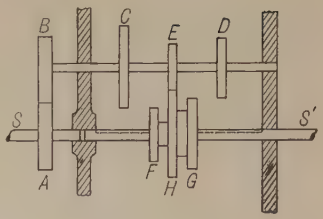

PROB. X–15

X–16. The sketch shows a nest of spur gears, each pair being always in mesh and all gears of the same pitch. F, G, and H form a unit keyed to shaft B. C, D, and E are loose on shaft A, but may be locked to the shaft one at a time. Find the numbers of teeth on all gears if the revolutions of B for one of A are to be $\frac{1}{2}$, $1\frac{1}{4}$, and $2\frac{1}{2}$ as C, D, and E respectively are keyed to A. No gear to have less than 14 teeth.

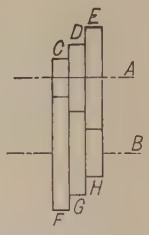

PROB. X–16

X–17. Both gears on both shafts A and B are fast. The three gears on shaft C are fast together but not to the shaft and may be moved along shaft C as a unit. Shaft A has a constant speed of 60 rpm, and speeds of B are to be 240, 60, and 15 rpm. Find suitable numbers of teeth in all gears if they are all 4-pitch.

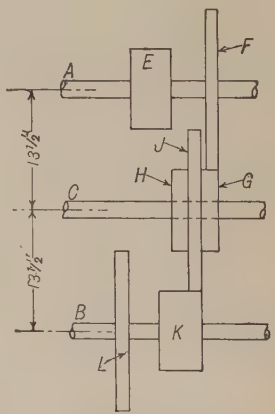

PROB. X–17

X–18. Gears A, C, and E are fast to shaft S. Shaft T is parallel to S and carries the gears B, D, and H which may be made fast to it only one at a time. S makes 900 rpm. When H is fast to T, T makes 1800 rpm; when D is fast, 600 rpm; and when B is fast, 300 rpm. Diametral pitch of gears as shown. Find suitable numbers of teeth for the gears, using not less than 12.

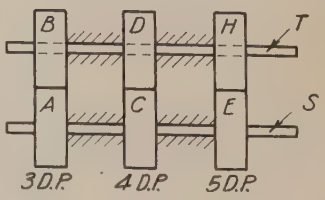

PROB. X–18

X–19. Sketch the train and find suitable numbers of teeth for the gears for an eight-day clock. Diameter of weight drum is $\frac{9}{\pi}$ inches. Weight to drop 36 in. in 192 hr. Pendulum to make a double oscillation in 2 sec. The escape wheel is fast to the same shaft as the second hand.

X–20. A, B, and C are gears having teeth as shown.

1. If A turns $+4$ and arm turns -3, find turns of B and C.
2. If A is not to turn and B turns $+30$, find turns of the arm.

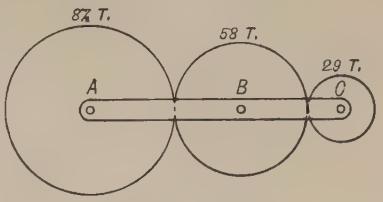

Prob. X–20

X–21. Gear A is fixed. The arm turns about the shaft on which A is located. Find the number of teeth on gear C if it makes three times as many absolute turns as B does but in the opposite direction.

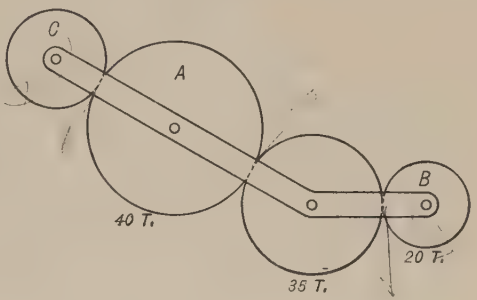

Prob. X–21

X–22. The arm (shown dotted) turns about the axis of gear A and carries the pins on which gears B and C turn. What must be the value of the train ABC in order that the reference mark R on C may always be pointing downward as the arm revolves, if gear A does not turn?

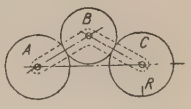

Prob. X–22

X–23. In order that the shaft C may turn 60 rpm, how many revolutions per minute must shaft A turn, and will it turn in the same sense as C or in the opposite sense?

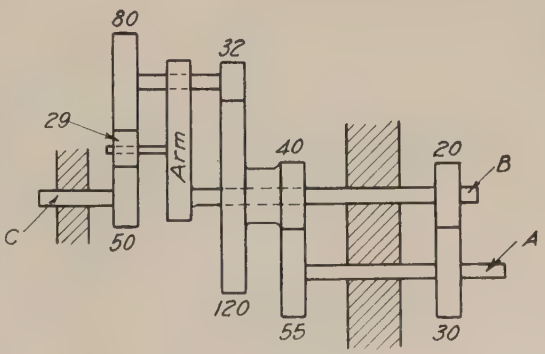

Prob. X–23

X–24. In this roller bearing D represents the fixed bearing in which the rollers are supported while S is the shaft. Assuming that there is pure rolling contact between the shaft and the rollers, and between the rollers and D, find the ratio of speed at which roller cage revolves to speed at which shaft revolves.

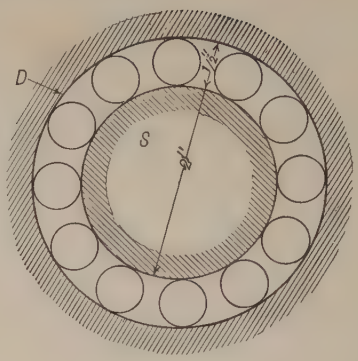

PROB. X–24

X–25. 1. If A turns $+3$ and the arm -5, find the turns of B, C, and D.

2. Suppose two idlers to be used between E and D, other conditions remaining as before; find the turns of D.

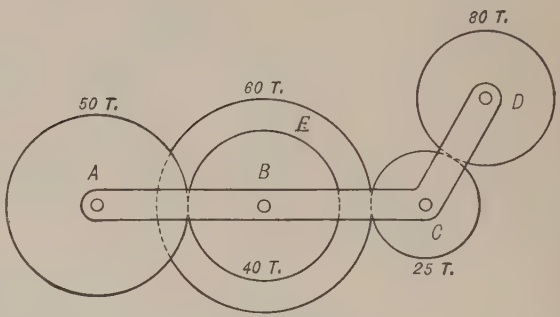

PROB. X–25

X–26. If A turns $+38$ times, how many turns does the arm make?

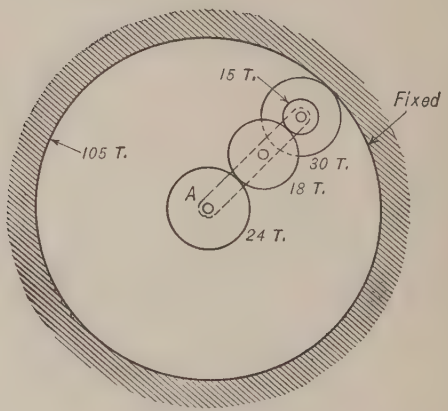

PROB. X–26

X–27. The arm turns loose in bearings in *C* and *F*. Gear *F* is fast to *B*, and *C* is fast to *A*. *D*, *E*, and *H* are all fast to the shaft which turns loose in the arm. The gears have teeth as follows: *C*–18, *D*–42, *E*–12, *F*–48, *H*–20, *K*–40. *K* is fast to the bearing. If *A* makes 1 rpm, what will be the rpm of *B*?

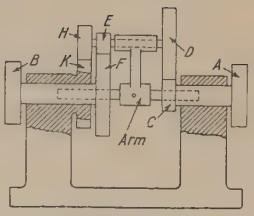

PROB. X–27

X–28. In the triplex pulley block, Fig. 10–23, let the gears have the following numbers of teeth: *F*–24, *E*–12, *C*–6, *D*–60. Let the diameter of wheel *A* be 36 in. and of *G* 18 in. Calculate the ratio of the linear speed of the load chain to that of the hand chain.

X–29. The sketch is a diagram of the arrangement of gears in an epicyclic train forming part of the feed train in a boring mill. Gear *A*, having 114 teeth, turns loose on shaft *S*. *A* is driven by *K* which has 72 teeth and is fast to shaft *P*. The gears *C* and *E* are both fast to a shaft whose axis is carried around with *A*. *B* is a gear which cannot turn. *F* is fast to shaft *S*. B has 34 teeth, *C*–34, *E*–32, *F*–36.

For one turn of *P* how many turns of *S*?

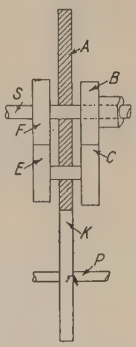

PROB. X–29

X–30. In this hoisting mechanism, *A* is a fixed annular having 100 teeth. The two idle pinions *B* are carried by the arm of the epicyclic train, which also carries the drum, as shown. Gear *C*, which is fast to the crank, has 70 teeth. Diameter of drum is 5 in., length of crank is 21 in., force applied at crank is 75 lb. Find the teeth on the pinions *B* and weight lifted, neglecting friction.

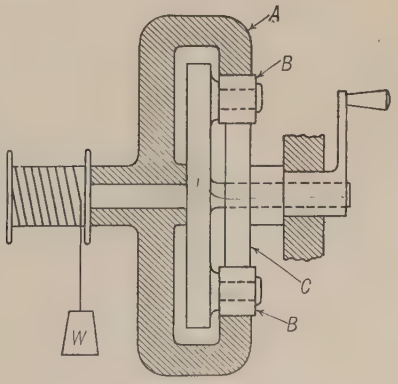

PROB. X–30

X–31. If shaft A makes 20 turns in a positive direction, find the number of turns of shaft B and its direction.

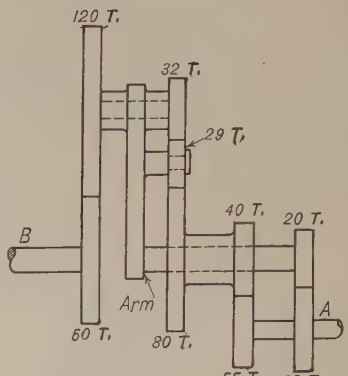

PROB. X–31

X–32. D is a fixed gear, A is fast to the shaft with the 54-toothed gear, and P is the arm of the epicyclic train. If A turns -20, find the turns of the arm, then find the turns of B.

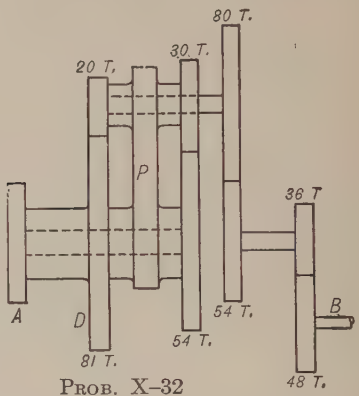

PROB. X–32

X–33. Shaft P carries a pointer H which records on a fixed dial the number of turns made by the shaft S. Gear B turns freely on shaft P and carries the shaft on which the gear D turns. D is in mesh with C which is fast to P and with E which is fast to the frame. The figures indicate the number of teeth in the gears. How many divisions must there be around the dial if the movement of H over one division indicates one turn of S?

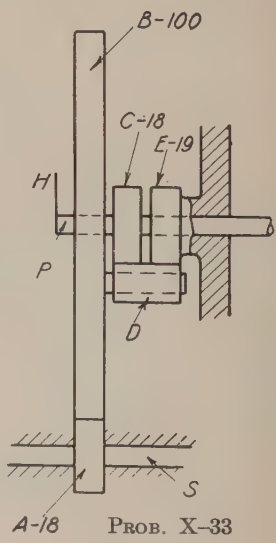

PROB. X–33

X–34. In this train find the ratio of the diameters C and D, if 3 turns of A as shown are to cause the arm to turn 11 times. Must a crossed or an open belt be used if the arm turns as shown?

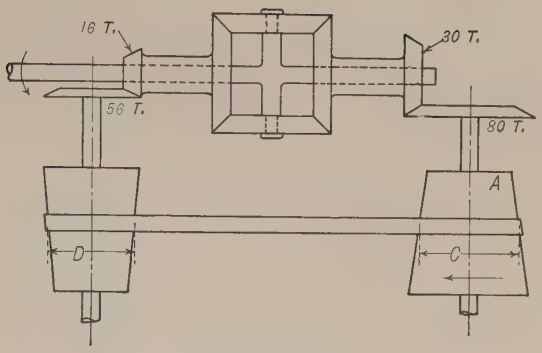

PROB. X–34

X–35. For 36 turns of D, find how many turns of F and in which direction?

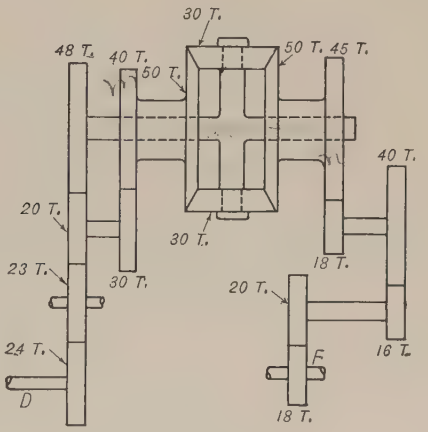

PROB. X–35

X–36. For −3 turns of D, find how many of F and in which direction?

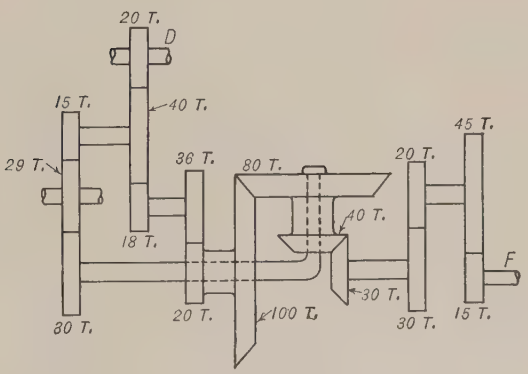

PROB. X–36

X–37. If an automobile is traveling in a circular path, the radius of the track followed by the wheels nearer the center of the circle being 8 times the width of the car (from center to center of wheels), how many turns does each of the rear wheels make relative to the gear *E*, Fig. 10–26?

X–38. Let shaft *S* turn +3 times. Find the turns of the arm.

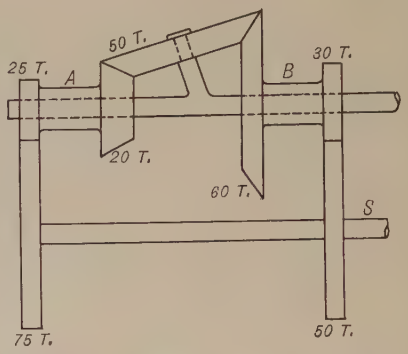

PROB. X–38

X–39. If *A* is a shaft coupled to a dynamo making 2500 rpm, how many revolutions per minute does *B* make?

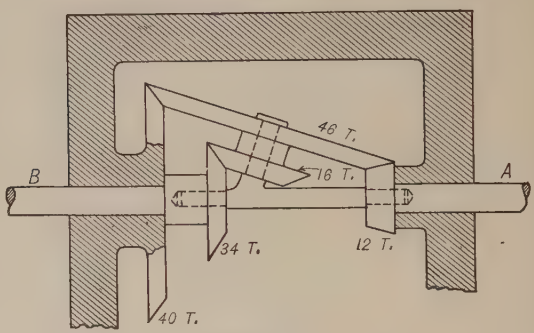

PROB. X–39

X–40. In this epicyclic train let *A* turn +6, find the turns of *B*.

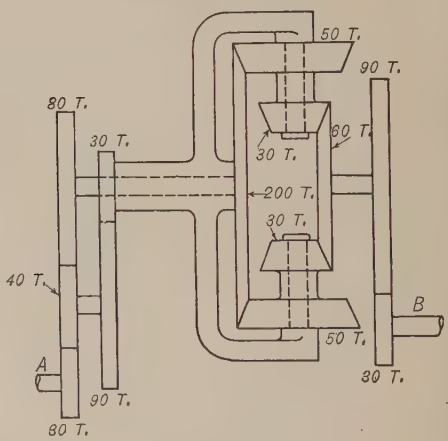

PROB. X–40

X–41. The gears have numbers of teeth as follows: D–105, C–35, B–30, A–20, F–25, H–100. C, B, and F are fast to shaft S, which is supported by the arm. The arm is free to turn about the axis of shaft P. Gear A is fast to P. D is concentric with P but cannot turn. Gear H is fast to shaft R which is in line with P.

For one turn of A, how many turns of H?

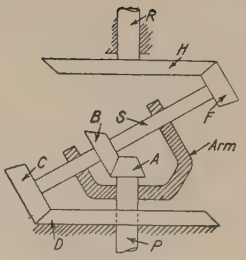

PROB. X–41

X–42. Gear A is fast to the fixed base M. Gears B and C are keyed to shaft S; gear D is keyed to the shaft T. The arm K is attached to the swivel head F, supports the outer end of shaft S, and forms bearings for the shaft T. The entire mechanism may revolve on M about the axis of A. The train value e_{AD} is $+2$. Prove that as the mechanism revolves about the fixed gear A, the pencil point P describes an ellipse whose semi-major axis $a = r + h$ and whose semi-minor axis $b = r - h$.

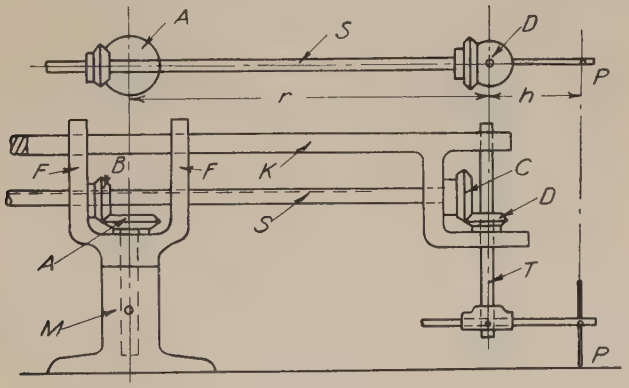

PROB. X–42

X–43. The three gears D, B, and C are fast to each other so that they turn as a unit, on a shaft S carried by the arm A. Gears G, E, and F are independent of each other, free to turn about the axis T.

(*a*) If F is held still and the arm turns 1 radian per second R. H., find by means of velocity vectors the angular speed and sense of E.

(*b*) If F turns $\frac{1}{4}$ radian per second R. H. at the same time that the arm turns 1 radian per second R. H., what are the angular speed and sense of E?

(*c*) If G is held still and the arm turns 1 radian per second R. H., what will be the speed and sense of E?

(*d*) How fast would G have to turn, and in which sense, to cause E to have no motion, with the arm turning 1 radian per second R. H.?

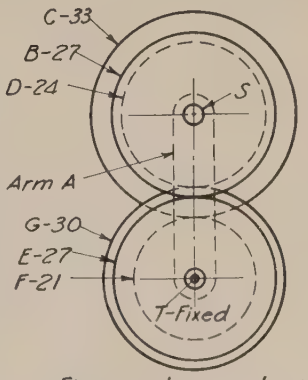

PROB. X–43

X–44. Gears are 4 D. P. H and K have 20 t. E has 23 t. Disk A is attached to the driving shaft S. Rollers C and D are integral with the bevel gears H and K respectively and are loose on shaft B. Gear E turns on stud T which is attached to shaft B, the latter being coupled to the driven shaft (not shown) in such a way that B may be moved axially and still continue to drive. Assume pure rolling contact between A and C and A and D. Assume A to turn 1 radian per minute.

1. Draw, in diagrammatic form, the two elevations, omitting all lines not needed in the solution of the problem, with rollers C and D equidistant from axis of A. Draw velocity vectors for points of contact of C and D with A, and determine graphically the velocity of the point M, where the axis of T intersects the base of the pitch cone of E. From this calculate the angular speed of B.

2. On the same figure move axis of A 3 in. to left of axis of T (equivalent to moving B 3 in. to right), and repeat the work described in 1.

3. Move axis of A $1\frac{1}{4}$ in. to right of axis of T and repeat same operation.

4. If A were turning 1000 rpm, how fast would B be turning in 2?

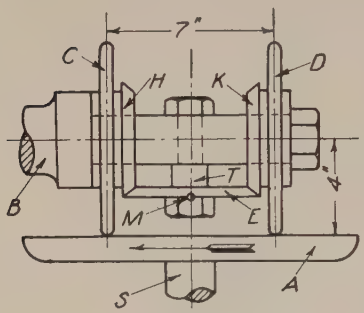

Prob. X-44

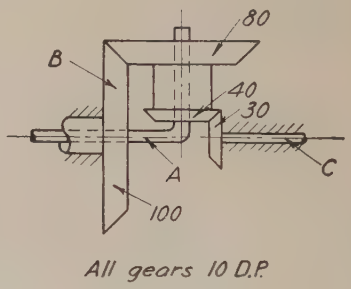

Prob. X–45

X–45. Gear B turns 6 radians per second R. H. as seen from left. Arm A turns 1 radian per second in same sense as B. Find instantaneous axis of the two intermediate gears and angular speed of the shaft C.

Solve by use of velocity vectors at scale 2 in. = 1 ft per sec.

CHAPTER XI

CAMS

11–1. A cam is a plate, cylinder, or other solid with a surface of contact so designed as to cause or modify the motion of a second piece, or of the cam itself. Either the cam or the other piece or both may be moving. The most common case is that of a plate, cylinder, or other solid having a curved outline or a curved groove, which rotates about a fixed axis and, by its rotation, imparts motion to a piece in contact with it, known as the follower. A cam and its follower form an application of the principle of transmitting motion by direct sliding contact. See § 7–2. Sometimes a roller is attached to the follower for the purpose of reducing the sliding friction. If the cam is properly designed the roller does not change the motion of the follower to any great extent. If the action of the piece is intermittent, it is sometimes called a wiper. That is, a cam, in most places, is continuous in its action, whereas a wiper is always intermittent; but a wiper is often called a cam, notwithstanding. A pair of gear teeth may be considered to be a cam and its follower.

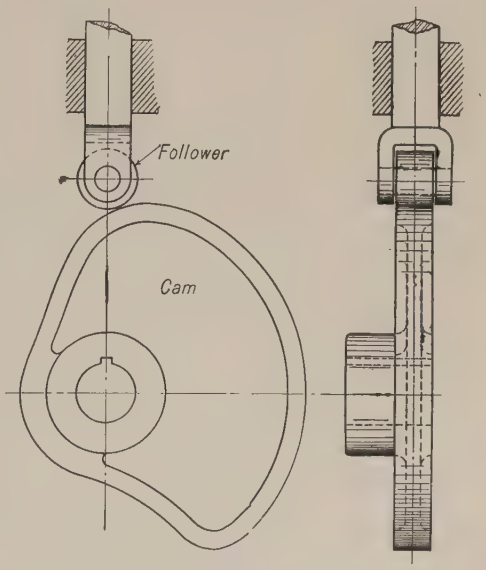

FIG. 11–1

Fig. 11–1 is a drawing of a cam known as a *plate cam*, and Fig. 11–2, a drawing of a cylinder containing an irregular groove and known as a *cylindrical cam*.

Very many machines, particularly automatic machines, depend largely upon cams, properly designed and properly timed, to give motion to the various parts.

Usually a cam is designed for the special purpose for which it is to be used. Ordinarily in practise the condition to be fulfilled in designing

a cam does not directly involve the speed ratio, but assigns a certain series of definite positions which the follower is to assume while the driver occupies a corresponding series of definite positions.

The relations between the successive positions of the driver and follower in a cam motion may be represented by means of a diagram whose abscissas are linear distances arbitrarily chosen to represent angular motion of the cam and whose ordinates are the corresponding dis-

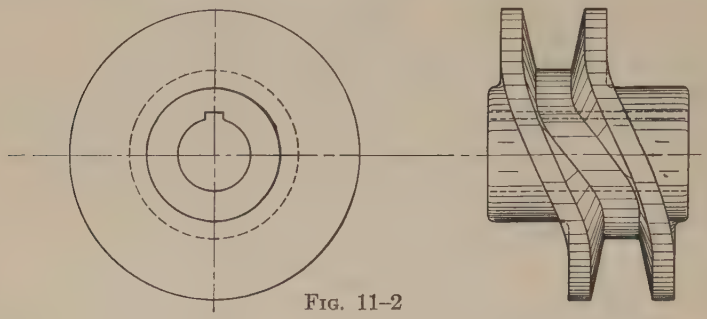

Fig. 11–2

placements of the follower from its initial position. This is illustrated in Fig. 11–3, where the line *Oabc* represents the motion given by the cam. The perpendicular distance of any point in the line from the axis *OY* represents the angular motion of the driver, while the perpendicular distance of the point from *OX* represents the corresponding movement of the follower, from some point considered as a starting-point. Thus

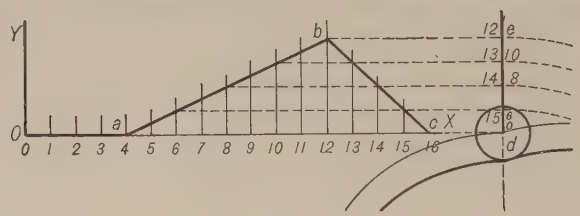

Fig. 11–3

the line of motion *Oabc* indicates that from the position 0 to 4 of the driver, the follower had no motion; from the position 4 to 12 of the driver, the follower had a uniform upward motion *b*12; and from position 12 to 16 of the driver, the follower had a uniform downward motion *b*12, thus bringing it again to its starting-point.

11–2. Diagrams for Cams Giving Rapid Movements. It very often happens that a cam is required to give a definite motion in a short interval of time, the nature of the motion not being fixed. The form of the diagram for such a motion will now be discussed.

For the diagram shown in Fig. 11–3 the follower has two uniform motions, and if the cam be made to revolve quickly, quite a shock will occur at each of the points where the motion changes, as *a*, *b*, and *c*; to obviate this the form of the diagram can be changed, provided it is allowable to change the nature of the motion.

Suppose that a cam is to raise a body rapidly from *e* to *f* (Fig. 11–4), the nature of the motion to be such that the shock shall be as light as possible.

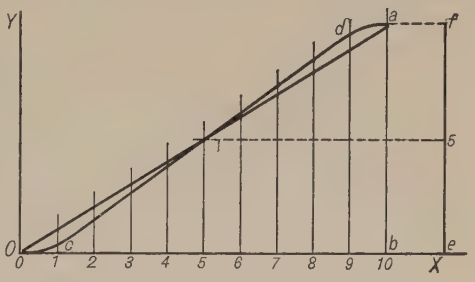

Fig. 11–4

For the straight line *Oa* the case is one of a uniform motion, the body being raised from *e* to *f* in an interval proportional to *ob*; here the motion changes suddenly at *O* and *a* accompanied by a perceptible shock. The line *Ocda* would be an improvement, the follower not requiring so great an impulse at the start or near the end of the motion, each being much more gradual than before.

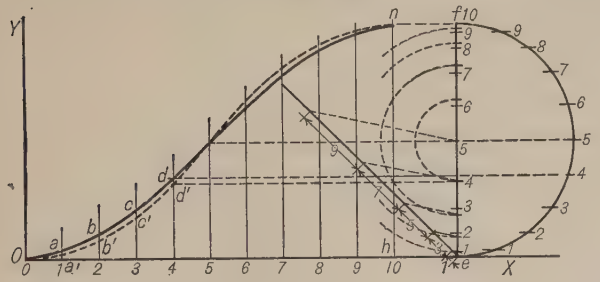

Fig. 11–5

The body may be made to move with a *harmonic motion*, the diagram for which would be drawn as follows (Fig. 11–5):

Draw the semicircle *e5f* on *ef* as a diameter; divide the time line *Oh* into a convenient number of equal parts (in this case ten), and then divide the semicircle into the same number of equal parts; through the divisions of the semicircle draw horizontal lines intersecting the vertical lines drawn through the corresponding points of division of the time line *Oh*, thus obtaining points, as *a*, *b*, *c*, etc. A smooth curve drawn through these points gives the full curve *Oabcd* . . . *n*. Here the body or follower receives a velocity increasing from zero at the start to a maximum at the middle of its path, when it is again gradually diminished to zero at *f*, the end of its path.

This form of diagram gives very good results, and is satisfactory in many of its practical applications.

A body dropped from the hand has no initial velocity at the start, but

has a uniformly increasing velocity, under the action of gravity, until it reaches the ground; similarly, if the body is thrown upward with the velocity it had on striking the ground, it will come to rest at a height equal to that from which it was dropped, and its upward motion is the reverse of the downward one, that is, a uniformly retarded motion. (See § 2–27.)

In designing a cam for rapid movement the motion of the follower may obey this same law of gravity, and have a uniformly accelerated motion until the middle of its path is reached, then a uniformly retarded motion to the end of its path.

A body free to fall descends through spaces, during successive units of time, proportional to the odd numbers 1, 3, 5, 7, 9, etc., and the total space passed over equals the sum of these spaces.

To develop a line of action according to this law upon the same time line *Oh*, and with the same motion *ef*, as before, proceed as follows:

Divide the time line *Oh* into any *even* number of equal parts, as ten; then divide the line of motion *ef* into successive spaces proportional to the numbers 1, 3, 5, 7, 9, 9, 7, 5, 3, 1, and draw horizontal lines through the ends of these spaces, obtaining the intersections a', b', c', etc., with the vertical lines through the corresponding time divisions 1, 2, 3, etc.; a smooth curve, shown dotted in the figure, drawn through these points, will give the cam diagram.

Fig. 11–6

Another kind of motion for a cam follower which has been used with good results, and which avoids abrupt changes in acceleration, gives a displacement curve whose ordinates are computed from equation (1) given below. Referring to Fig. 11–6, let the follower move along line *AB*. Draw a semicircle with *AB* as a diameter, and assume the radius *CD* of this semicircle to turn with uniform angular speed starting at *CA* when the follower begins to move and turning 180° to *CB* while the follower moves to *B*. Let $AB = L$. Let s be the displacement of the follower when *CD* has turned through the angle ϕ. Then the cam is so designed that the follower has a displacement which satisfies the following equation:

$$s = \frac{L}{\pi}(\phi - \tfrac{1}{2}\sin 2\phi) \qquad (1)$$

If β is the total angle through which the cam turns to cause the follower to move the distance L and θ is the angle turned by the cam when the radius *CD* has turned through the angle ϕ, then

$$\frac{\phi}{\pi} = \frac{\theta}{\beta} \quad \text{or} \quad \phi = \frac{\pi\theta}{\beta}$$

Substituting this value of ϕ in equation (1) gives

$$s = \frac{L}{\pi}\left(\frac{\pi\theta}{\beta} - \frac{1}{2}\sin\frac{2\pi\theta}{\beta}\right) \tag{2}$$

In Fig. 11–7 the full-line curve is the displacement-time curve for a cam follower whose ordinates were determined from equation (2). The

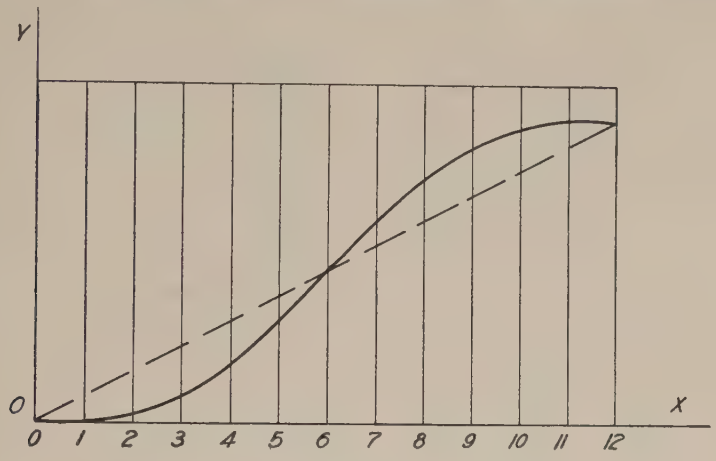

FIG. 11–7

dotted straight line represents the term $\frac{L}{\pi}\left(\frac{\pi\theta}{\beta}\right)$, and the distance along the ordinate from the straight dotted line to the full-line curve represents the term $\frac{L}{\pi}\left(-\frac{1}{2}\sin\frac{2\pi\theta}{\beta}\right)$.

11–3. Plate Cams. A plate cam imparts motion to a follower guided so that it is constrained to move in a plane which is perpendicular to the axis about which the cam rotates, that is, in a plane coincident with or parallel to the plane in which the cam itself lies. The character of the motion given to the follower depends upon the shape of the cam. The follower may move continuously or intermittently; it may move with uniform speed or variable speed; or it may have uniform speed part of the time and variable speed part of the time. A knowledge of the various types of plate cams, and an idea of the manner of attacking the problem of designing a cam for any specific purpose, can best be obtained by studying a number of examples.

Example 1. A cam is to be keyed to the cam shaft (Fig. 11–8), which turns as indicated. The shape of the cam is to be such that the point of the slider S will be raised with uniform motion from A to B while the cam makes one-half a turn, and

lowered again to the original position during the second half-turn of the cam. The cam shaft turns at uniform speed.

Solution. (Fig. 11–9.) Draw a circle through A with C as a center. Since the follower is to rise from A to B while the cam makes one-half a turn (or turns through

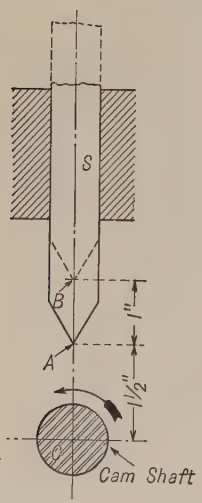

Fig. 11–8

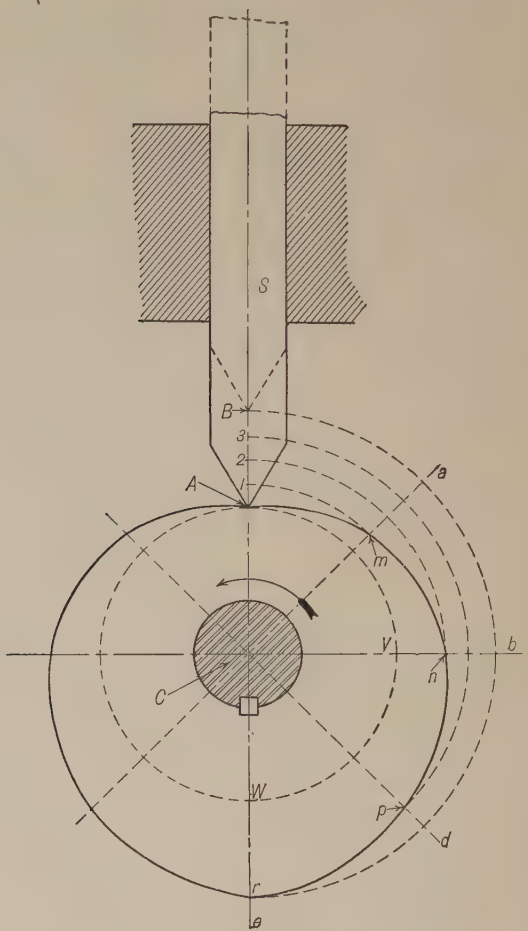

Fig. 11–9

180°); and since the cam shaft turns at uniform speed, divide one-half of the circle (AVW) into any number of *equal* angles by the lines Ca, Cb, Cd, and Ce. Four divisions are made in the illustration, although for accurate work a greater number would be desirable. The divisions are made on the side which is turning upward toward the follower, that is, back on the side *from* which the arrow is pointing. Now, divide the distance AB into as many parts as there are divisions in the angle AVW. Since the follower is to rise from A to B with uniform motion, the divisions of AB will be equal. That is, A to 1 = 1 to 2 = 2 to 3 = 3 to B. When the cam has

made one-fourth of a half revolution, the line Ca will be vertical. A point m on this line, found by swinging an arc through 1 with center C, will be the point on the cam which will be at the height $C1$ above the center when the cam has made one-fourth of the half revolution. Similarly, n will be the point on the cam which will be at 2 when the cam has turned one-half of the half revolution. p and r are found in the same way, by drawing arcs through 3 and B cutting the lines Cd and Ce, respectively.

A smooth curve drawn through the points A, m, n, p, and r will be the correct outline for that portion of the cam which will raise the follower point from A to B as specified. Since the follower is to be lowered from B to A, also, with uniform motion during the remaining half-turn of the cam, the other half of the cam outline will be a duplicate of that already found.

Example 2. Data the same as for Example 1, except that the follower, instead of having a point shaped as in that example, has a roller, as shown in Fig. 11–10, on which the cam acts. The construction is shown in Fig. 11–11. It is necessary first to find the outline of the cam for a follower like that in Fig. 11–9, the point of the follower being assumed to be at the center A of the roller, Fig. 11–11. The construction of this curve is exactly the same as explained for Fig. 11–9 and is lettered the same as in Fig. 11–11, the curve itself being drawn as a dot and dash line. This is called the *pitch line* of the cam. The next step is to set a compass to a radius equal to the radius of the roller and, with

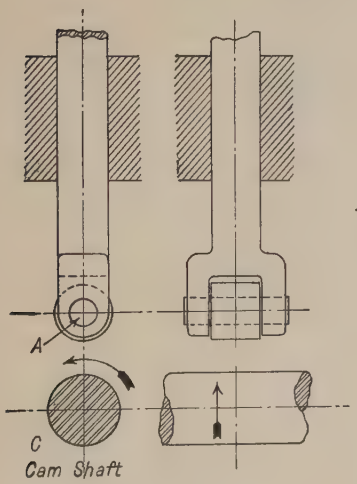

Fig. 11–10

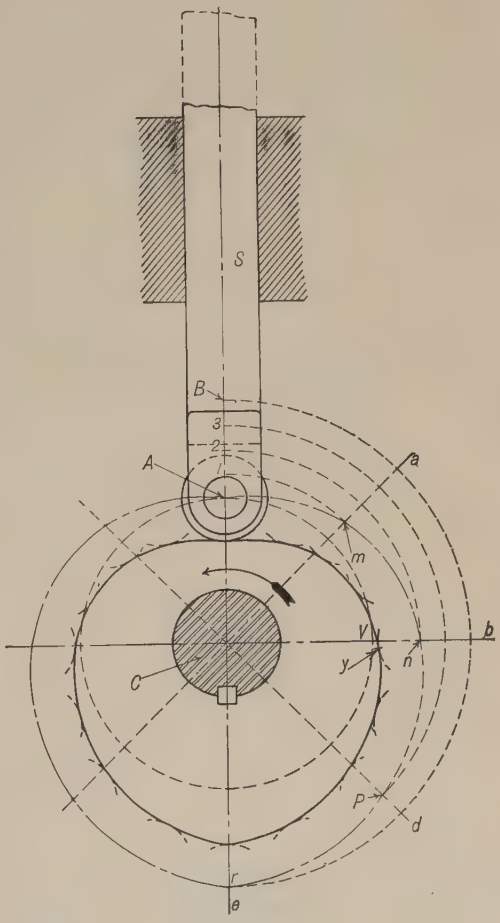

Fig. 11–11

centers at frequent intervals on the pitch line, draw arcs as shown dotted. The true cam outline is a smooth curve drawn *tangent* to these arcs. It should be noted that the point of tangency will not necessarily lie on the line joining the center of the arc to the center of the cam. For instance, consider the arc drawn with n as a center. The cam curve strikes this arc at y, not at the point where the arc cuts the line Cb.

This condition often prevents the cam which acts on a roller or similar follower from giving exactly the same motion as would be obtained from the "pitch line" cam acting on a pointed follower. This is likely to be true at convex places where the motion changes suddenly.

Example 3. Given a follower with a roller as shown in Fig. 11–12 where the line of motion does not pass through the cam axis. The lowest position of the center of the roller is a distance N above the center of the cam shaft, and the line AB along

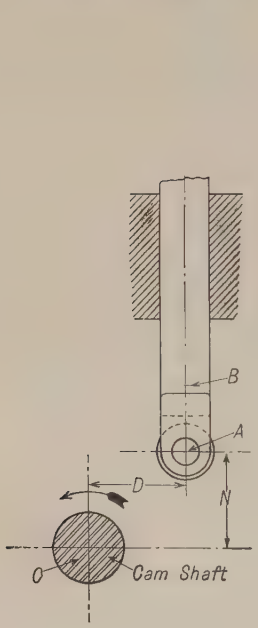

Fig. 11–12

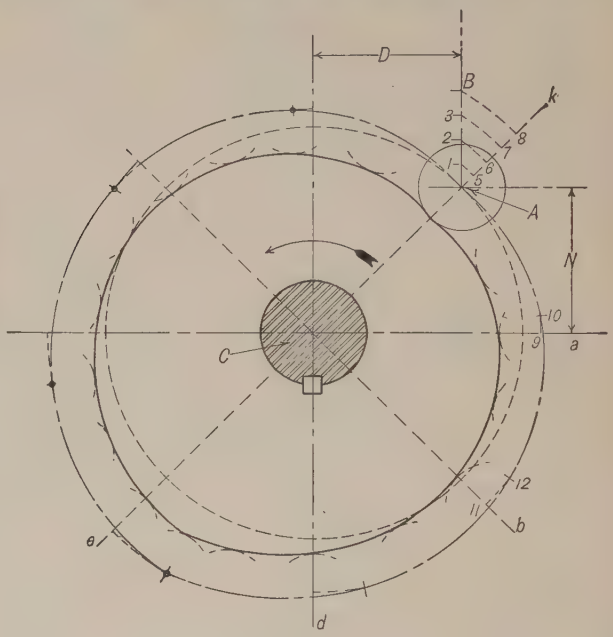

Fig. 11–13

which the center of the roller is guided is a distance D to the right of a vertical line through C. That is, the center of the cam shaft is offset a distance D to the left of the line of motion of the center of the follower. To draw the outline of a plate cam which, by turning as shown by the arrow, shall raise the center of the roller from A to B with uniform motion while the cam makes one-half a turn, then lower it again to A during the second half-turn of the cam.

Solution 1. Fig. 11–13 shows one solution of this problem. Starting with C, locate the center A by measuring a distance D to the right of C and a distance N above C. Draw a line Ck through C and A. Since the upward motion is to take place during one-half turn of the cam, measure back 180° from Ck and draw Ce (that is, $kACe$ is a straight line). Divide the angle kCe into any convenient number of equal parts as before (in this case four) by the lines Ca, Cb, Cd. Divide AB into

the same number of equal parts, since the follower is to rise with uniform speed. From C as a center swing an arc through 1 cutting Ck at 5. Cut Ca with the same arc at 9. Make the length 9–10 equal to 5–1. Then 10 is one point on the pitch line of the cam. In the same way point 12 is found by making arc 11–12 equal to arc 6–2, and, similarly, all the way around. The true cam outline is found as before by drawing arcs with radii equal to the radius of the roller, and with centers on the pitch line, and then drawing a smooth curve tangent to these arcs.

Solution 2. Fig. 11–14 shows another method for finding the pitch line of the cam when the follower point (in this case the axis of the roller) moves in a straight line not passing through the cam axis. Having the points 1, 2, 3, etc., as in Solution 1, draw a circle about C with radius D. The line of motion B–1 extended will be tangent to this circle at h. Through h draw Ca and from Ca lay back the angle 180°,

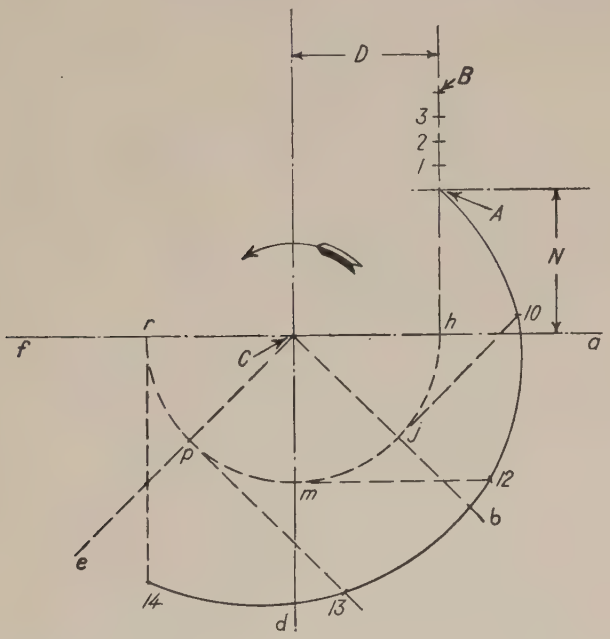

FIG. 11–14

getting Cf. Divide this angle into four equal parts getting lines Cb, Cd, Ce, and Cf, cutting the circle at j, m, p, and r respectively. Draw tangents at these points. On these tangents lay off $j - 10 = h - 1$; $m - 12 = h - 2$; $p - 13 = h - 3$; and $r - 14 = hB$. These points, 10, 12, 13, and 14 are the same points as found in Solution 1. The rest of the pitch line is found in a similar manner and the cam completed as before.

Example 4. Fig. 11–15 is a cam which raises the center of the roller from A to B with harmonic motion during one-third of a turn, allows it to drop to its original position instantly, and holds it there during the remaining two-thirds of a turn. The angle kCf, through which the cam turns to raise the roller, is laid off (120°) and divided into an *even* number of *equal* parts. Since the roller is to rise with harmonic motion, a semicircle is drawn with AB as a diameter, and the circumference of this

semicircle is divided into as many equal parts as there are divisions in the angle kCf. From the points of division on this semicircle perpendiculars are drawn to the line AB, meeting it at points 1, 2, 3. These points are the points of division of AB to be used in finding the pitch line of the cam, which is found as previously described. The last point on the part which raises the follower is 16. Since the follower is to drop instantly, draw a straight line from 16 to 17, the point where an arc through A cuts Cf. The remainder of the pitch line is a circle about C through 17 around to A.

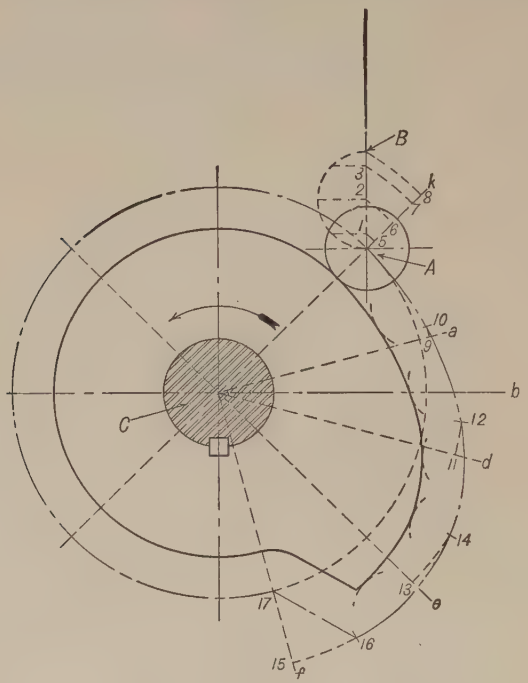

FIG. 11–15

Example 5. In Fig. 11–16 let it be required to design a cam to be placed on shaft O to raise slider A to A_1 during one-third of a turn of the cam, allow it to drop at once to its original position and remain there during the rest of the turn of cam, the character of the motion of A to be unimportant except that the starting and stopping shall be gradual. The cam is to act on a roller on the rocker BCD, the rocker being connected to the slider by the link BA. The cam turns left handed.

Solution. Fig. 11–17. First draw the motion diagram assuming uniform motion for A. This is shown by the dotted line ta_8. Next substitute for this line the line shown full, the greater part of which is straight, having more slope than the original line and connected to points t and a_8 by curves drawn tangent to the sloping line and tangent to horizontal lines at t and a_8.

Subdivide into equal parts the distance tt_8, which represents the $\frac{1}{3}$ turn during which the motion of the slider takes place, erect ordinates at these points cutting the motion plot at points a_1, a_2, etc., and project these points on to the path of A getting A_1, A_2, etc. From A_1, A_2, etc., with radius AB cut an arc drawn about C

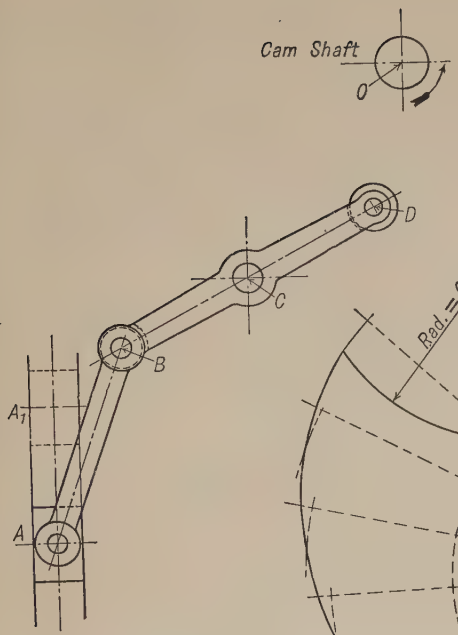

FIG. 11–16

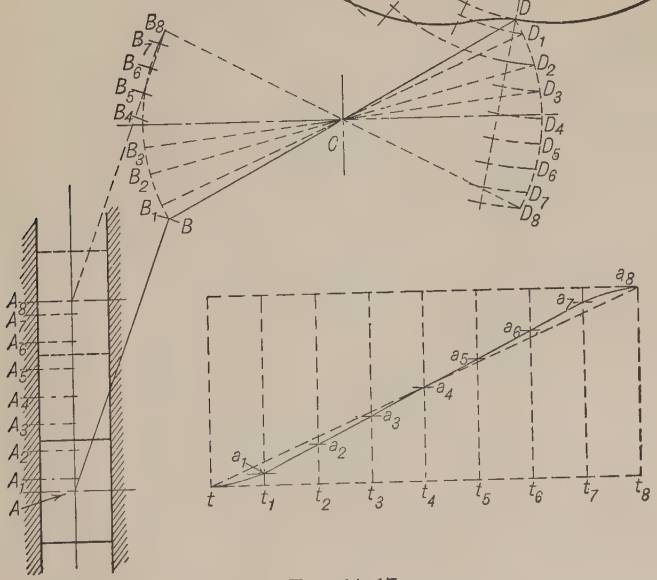

FIG. 11–17

with radius CB, getting B_1, B_2, etc. From these points draw lines through C cutting the arc of radius CD at D_1, D_2, etc. The cam is found from these points as in previous examples.

Example 6. Referring to Fig. 11–18, a plate cam on a shaft whose axis is at C is to turn left handed and cause motion to a follower through a roller. The axis A of the roller is to move along the straight line from A_0 to A_6 while the cam turns 120°, remain

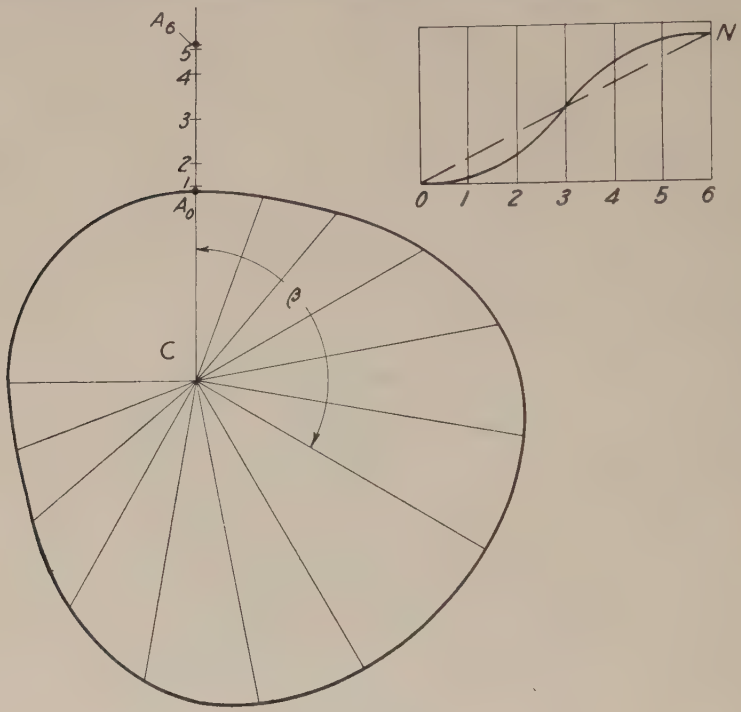

Fig. 11–18

at rest while the cam turns 30°, return to its original position while the cam turns 120°, and remain at rest for the remainder of the cam revolution. The motion of the follower for both its upward and downward stroke is to conform to the equation

$$s = \frac{L}{\pi}\left(\frac{\pi\theta}{\beta} - \frac{1}{2}\sin\frac{2\pi\theta}{\beta}\right) \quad \text{(See § 11–2.)}$$

Let $CA_0 = 2$ in.; $A_0A_6 = L = 1\frac{1}{2}$ in. Since the motion of A takes place while the cam turns 120, $\beta = \frac{2\pi}{3}$. Substituting these values the equation becomes

$$s = \frac{1.5}{\pi}\left(\frac{\pi\theta}{\frac{2\pi}{3}} - \frac{1}{2}\sin\frac{2\pi\theta}{\frac{2\pi}{3}}\right)$$

$$= 0.478\left(\frac{3\theta}{2} - \frac{1}{2}\sin 3\theta\right) \qquad \text{(I)}$$

Points on the cam pitch line will be found for each of six equal subdivisions of β, hence θ will have successive values of

$$\frac{2\pi}{3} \div 6, \frac{4\pi}{3} \div 6, \frac{6\pi}{3} \div 6, \text{ etc.}$$

The points C, A_0, and A_6 having been located on the drawing the next step is to construct the displacement diagram with its x-axis perpendicular to A_0A_6 and passing through A_0 in order that the ordinates may be projected directly on to the line A_0A_6.

To construct the displacement diagram it will be easier to use the two terms of equation (I) separately. The first term $0.478\left(\frac{3\theta}{2}\right)$ will give a straight line. Choose some distance 0–1 to represent the equal subdivisions of β and lay it off six times along the x-axis since six divisions of β are used. θ will have values of $\frac{\beta}{6}, \frac{2\beta}{6}, \frac{3\beta}{6}$, etc., and since $\beta = \frac{2\pi}{3}$ the values of θ will be $\frac{\pi}{9}, \frac{2\pi}{9}, \frac{\pi}{3}, \frac{4\pi}{9}, \frac{5\pi}{9}, \frac{2\pi}{3}$.

Erect ordinates at the points 1, 2, etc., and on the last ordinate 6 measure up the distance $6\text{–}N = A_0A_6 = L$. Draw the straight line $O\text{–}N$. This is the curve for the term $0.478\left(\frac{3\theta}{2}\right)$. For division 1 the second term $0.478\ (-\frac{1}{2}\sin 3\theta)$ becomes $0.478\left(-\frac{1}{2}\sin\frac{\pi}{3}\right) = -0.21$. That is, the actual curve cuts the ordinate at point 1 at a distance 0.21 in. below the line $O\text{–}N$.

The other points on the curve are determined in like manner.

The ordinates are now transferred to the line A_0A_6, and the pitch line of the cam is constructed as in previous examples. Since the return motion of the follower is the same as the upward motion the same displacement curve will serve for constructing that part of the cam which controls the return motion.

The pitch line of the cam and the diameter of the roller upon which it is to act having been obtained, the actual cam outline is drawn as already explained.

11–4. Positive Motion Plate Cams. It will be noticed that, in each of the cams which have been discussed, the follower must be held in contact with the surface of the cam by some external force such as gravity, or a spring. The cam can only force the follower away from the cam shaft; some outside force must bring it back. If it is desired to make the cam positive in its action in either direction without depending upon external force, the cam must be so constructed as to act on both sides of the follower's roller, or there must be two rollers, one on either side of the cam. In Fig. 11–19, the pitch line of the cam is made the center line of a groove of a width slightly greater than the roller diameter, thus enabling the cam to move the roller in either direction.

Fig. 11–20 shows another style of positive motion cam. The follower consists of a framework carrying two rollers, one, roller C, resting on cam A, which is designed so as to give whatever motion is desired for the follower. The other, roller D, rests on cam B, which is designed to be in contact with roller D, the position of which depends in turn upon

the position of the roller C. It would be possible to have both rollers touching the same cam, but then the movement of the follower could only be chosen for one-half a turn of the cam, the other half being determined by the shape of the cam necessary to be in contact with both rollers.

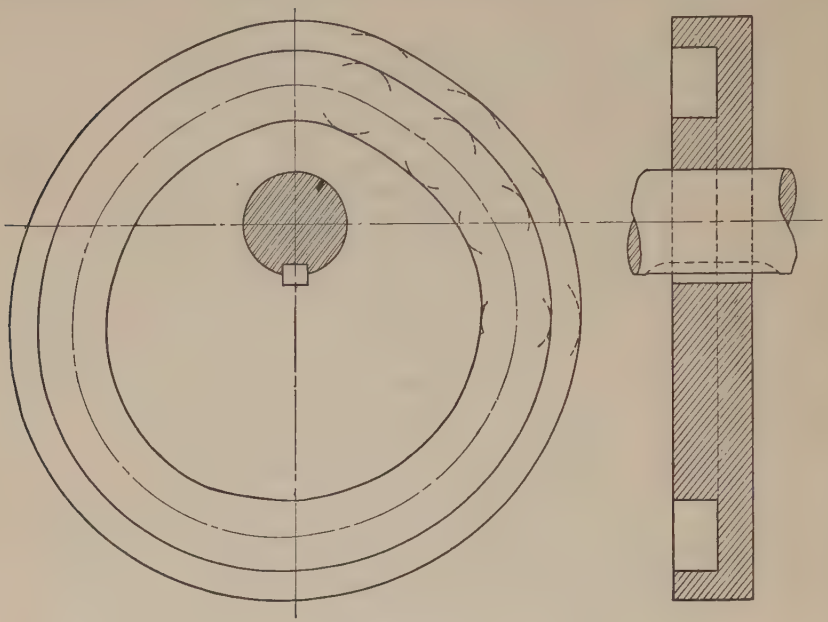

FIG. 11–19

11–5. Plate Cam with Flat Follower. The follower for the cam shown in Fig. 11–21 has a flat plate at its end instead of a roller. The cam is so designed that, when it turns right handed, the follower is raised with harmonic motion while the cam makes one-third of a turn, then remains at rest during the next third of a turn of the cam and is lowered with harmonic motion during the remaining third of a turn.

If the center line of the guides in which the follower moves does not pass through the center of the cam, the shape of the cam is not affected, provided the direction is the same. The method of construction is as follows: Assuming that the follower is shown in its lowest position, measure up along a vertical line passing through the center of the cam the distance $o8$ which the follower is to move. Divide this into any even number of harmonic divisions, eight being used in the drawing. Lay back the angle oEm equal to the angle through which the cam turns while the follower is being lifted. Divide oEm into as many equal angles as there are harmonic divisions in the line $o8$. Through point 1

swing an arc with E as a center cutting the first radial line at w; through w draw a line perpendicular to Ew. Through 2 draw an arc cutting the second radial line at v and draw through v a line perpendicular to Ev. In a similar way draw perpendiculars to Eu, Et, Er, Ep, En, and Em. A smooth curve tangent to all of these perpendiculars will be the outline of that portion of the cam which raises the follower.

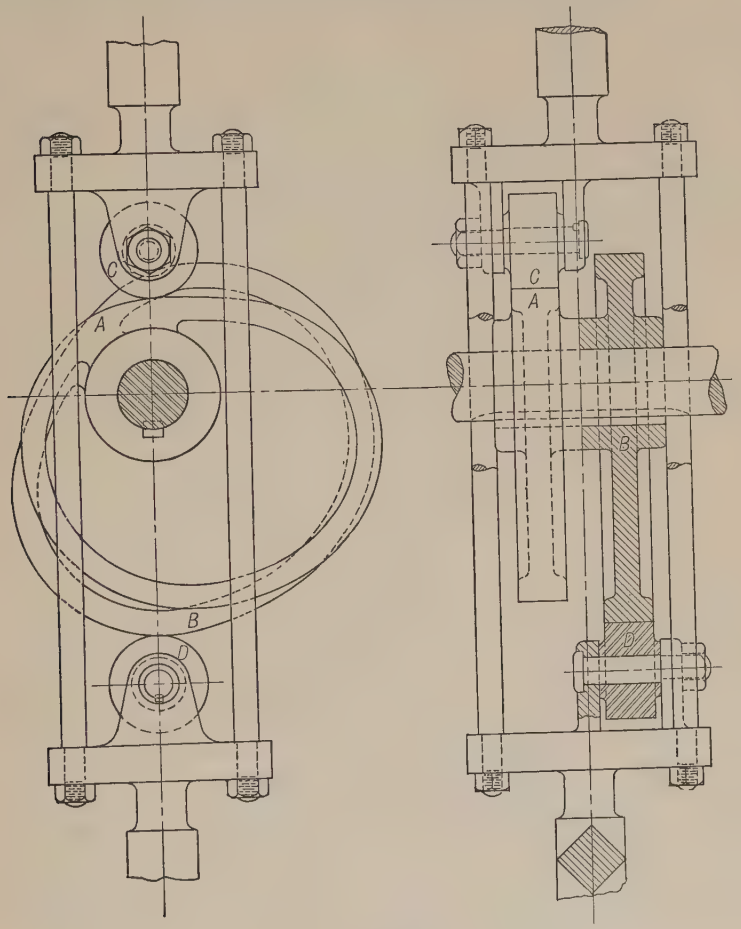

FIG. 11–20

Since the follower is to remain at rest while the cam turns through the next 120° the outline between the line Em and the line Ek 120° away from Em will be an arc of a circle through m with E as a center.

The outline of the portion of the cam which lowers the follower is found in a manner similar to that described for raising it.

If the foot of the follower made an angle θ with the center line of its path, θ being other than 90°, the construction lines at c, d, e, f, etc., instead of being drawn perpendicular to Ec, Ed, Ee, Ef, etc., would be drawn making an angle θ with these lines.

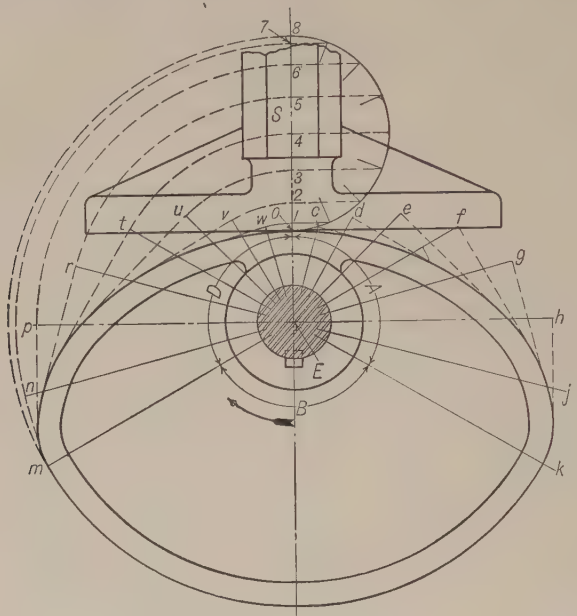

FIG. 11–21

11–6. Plate Cam with Flat Rocker. The cam in Fig. 11–22 actuates the follower S through the rocker R which is pivoted at P. S slides in guides, and remains still while the cam makes a quarter turn right handed, then rises to the upper dotted position with harmonic motion during a quarter turn of the cam. During the next quarter turn the follower drops with harmonic motion to its original position, and remains at rest during the last quarter turn. The foot of the follower is a semicircle with center at o, resting on the upper flat surface of the rocker. To find the cam outline, first divide the distance $o6$ into harmonic spaces, six being used in this case. These points of division are the successive positions of the center of the semicircle. Draw arcs of the circle with each of the points, 1, 2, 3, 4, 5, 6, as centers. Draw the dotted circle K tangent to the upper surface of the rocker produced. Next, draw the lines a, b, c, d, e, and f tangent to circle K and to the arcs drawn at 1, 2, 3, 4, 5, and 6 respectively. Parallel to, and at a distance T from, lines a, b, c, etc., draw lines g, h, i, j, etc., cutting the vertical line through the cam center C at 7, 8, 9, 10, 11, and 12.

Since the follower is to remain at rest during a quarter turn of the cam, the outline of the cam over the angle A is an arc of a circle with radius CE. The initial line CE may be taken at any convenient place. In the figure it is parallel to the path of S. It might have been perpendicular to the bottom of the rocker when the latter is in its lowest position.

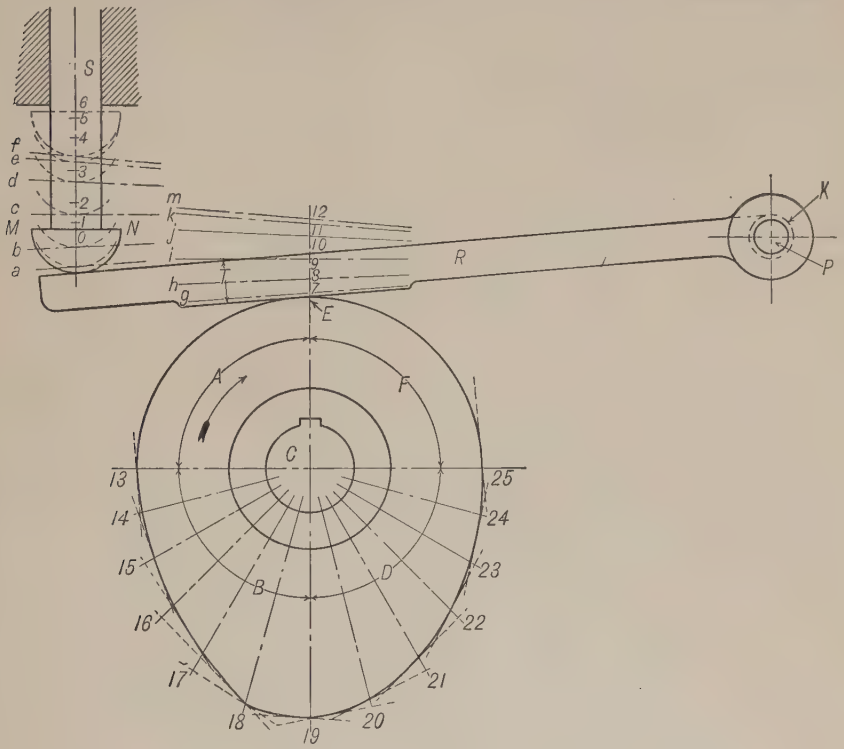

Fig. 11–22

Since the upward movement takes place during a quarter turn, or 90°, lay off angle B equal to 90° and divide it into as many equal angles as there are harmonic divisions in $o6$. Lay off $C14$ equal to $C7$ and through point 14 draw a line making the same angle with $C14$ that line g makes with CE. Draw similar lines through each of the other radial lines $C15$, $C16$, $C17$, $C18$, and $C19$. The cam outline will be a smooth curve tangent to all the lines which have been thus drawn.

A similar construction is used for finding the curve for the part of the cam which lowers the follower. The last part of the cam, over angle F, will be a circular arc to give the period of rest.

11–7. Eccentric as a Cam. In Fig. 11–23 an eccentric (see § 6–21) is shown acting as a cam on a wedge-shaped follower. The eccentric

turns about the fixed axis C, the center of the eccentric being at B. The stroke of the follower is equal to twice the eccentricity CB. The full lines represent the mechanism when the follower is in its lowest

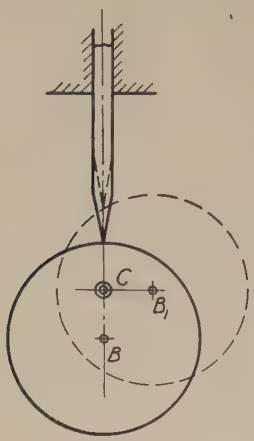

FIG. 11–23

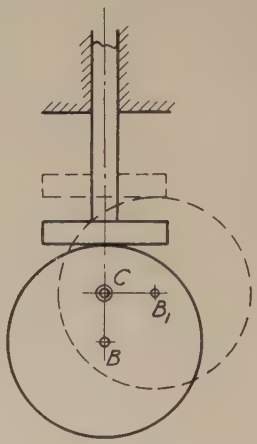

FIG. 11–24

position, and the dotted lines, when the cam has turned through 90°. The motion does not follow any one of the simple laws, but its character may be easily determined either graphically or by computation. A roller may be placed on the follower without materially changing the motion.

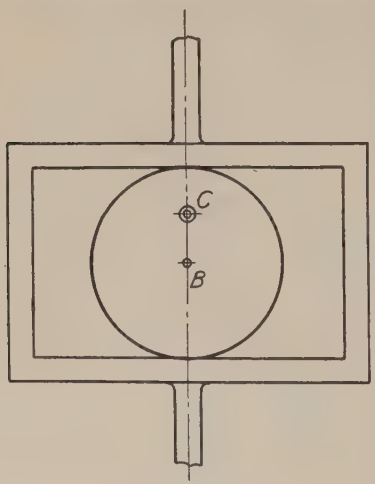

FIG. 11–25

Fig. 11–24 shows the same eccentric as Fig. 11–23 acting on a flat-faced follower, the acting face of the follower being perpendicular to the direction of its motion. It is evident that the point of tangency of the follower and cam is always directly over the center B; hence the follower has simple harmonic motion.

If the follower is made to enclose the cam as shown in Fig. 11–25, a positive-motion cam results, which is the equivalent of the " Scotch yoke " mentioned in connection with Fig. 6–35.

11–8. Triangular Cam. Fig. 11–26 shows an equilateral triangle abc, formed by three circular arcs, whose centers are at a, b, and c, the whole turning about the axis a, and producing an intermittent motion in the slotted piece B. The width of the

slot is equal to the radius of the three circular arcs composing the three equal sides of the triangular cam A, and therefore the cam will always bear against both sides of the groove.

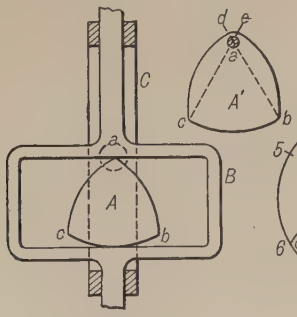

Fig. 11–26

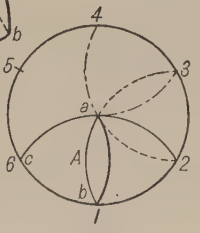

Fig. 11–27

If we imagine the cam to start from the position shown in Fig. 11–27 when b is at 1, the slotted piece B will remain at rest while b moves from 1 to 2 (one-sixth of the circle, 1, 2 . . . 6), the cam edge bc merely sliding over the lower side of the slot. When b moves from 2 to 3, i.e., from the position of A, shown by light full lines, to that shown by dotted lines, the edge ab will act upon the upper side of the slot, and impart to B a motion similar to that obtained in Fig. 11–24, being that of a crank with an infinite connecting rod; from 3 to 4 the point b will drive the upper side of the slot, ca sliding over the lower side, the motion here being also that of a connecting rod with an infinite link, but decreasing instead of increasing as from 2 to 3. When b moves from 4 to 5 there is no motion in B; from 5 to 6, c acts upon the upper side of the slot, and B moves downward; from 6 to 1, ac acts on the upper side of the slot, and B moves downward to its starting position. The motion of B is accelerated from 5 to 6 and retarded from 6 to 1.

At A' a form of cam is shown where the shaft a is wholly contained in the cam. In this case draw the arcs de and cb from the axis of the shaft as a center, making ce equal to the width of the slot in B; from c as a center with a radius ce draw the arc eb, and note the point b where it cuts the arc cb; with the same radius and b as a center draw the arc dc, which will complete the cam. In this case the angle cab will not be equal to 60°, and the motions in their durations and extent will vary a little from those described above.

11–9. Cylindrical Cams. The general appearance of a cylindrical cam has already been shown. (See Fig. 11–2.) Figure 11–28 gives dimensions for the hub and groove for a cylindrical cam which is to hold a follower still for one-eighth turn of the cam, move it 2 in. to the right

in a line parallel to the axis of the cam, with uniformly accelerated and uniformly retarded motion while the cam makes three-eighths turn,

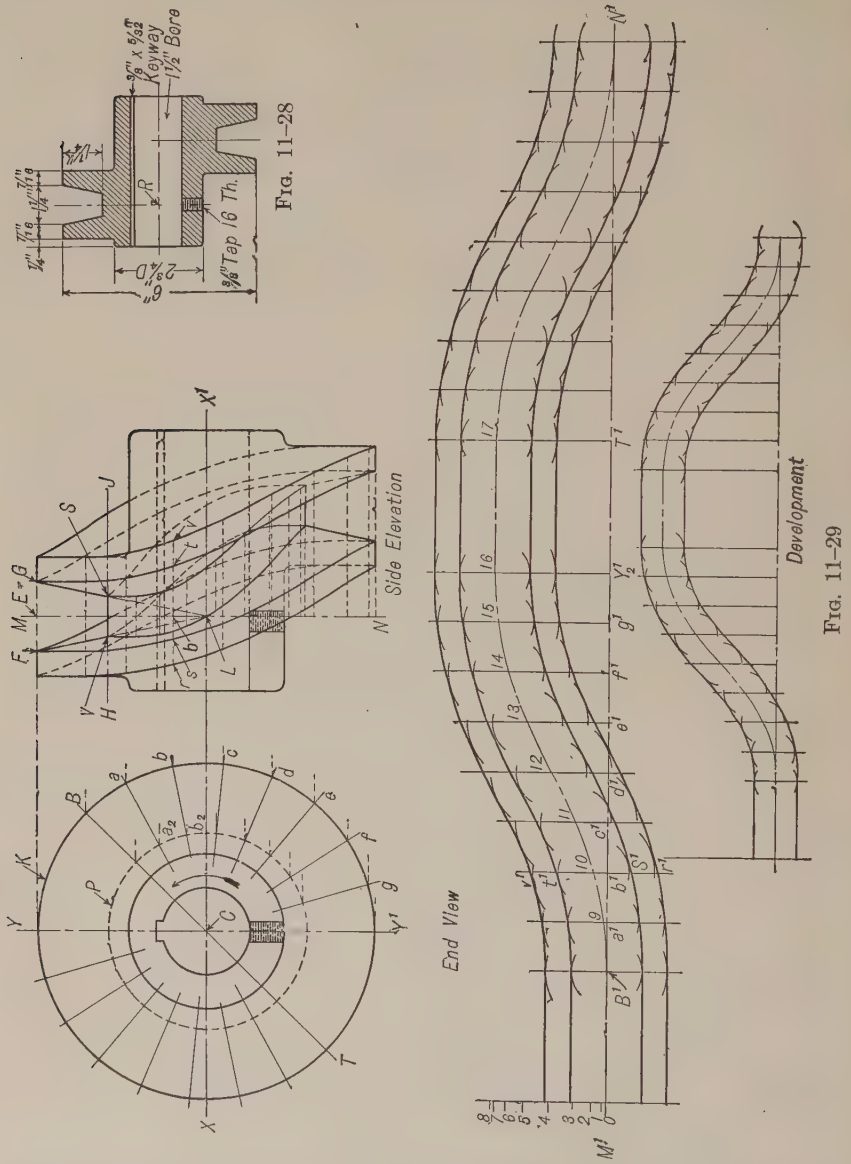

FIG. 11–28

FIG. 11–29

hold it still for one-eighth turn, and return it to its original position with similar motion in three-eighths turn. The solution of this problem

is shown in Fig. 11–29. The upper left-hand view is an end view of the cam, the upper right-hand view is a side elevation of the cam.

To make the drawing, proceed as follows:

Locate the center line XX'. On the line XX' choose the point C at any convenient place and draw the circle K whose radius is equal to the outside radius of the cylinder. Also draw the dotted circle P with the radius equal to the outside radius minus the depth of the groove. Draw the vertical center line YY'. Lay back the angle YCB equal to $\frac{1}{8}$ of 360°, that is, 45°. This is the angle through which the cam will turn before the follower starts to move. Since the movement of the follower is to take place during the next three-eighths of a turn, the cam will turn through the angle BCY' to give the motion to the follower. Since the follower is to remain at rest during the next one-eighth turn, the angle $Y'CT$ equal to 45° will next be drawn, and the remaining angle TCY will be the angle through which the cam will turn to move the follower back to its original position. Now, draw the center line MN at any convenient distance on the right of the figure already drawn, and locate the point E on this line at a distance from XX' equal to the outside radius of the cylinder. On a horizontal line drawn through E locate the points F and G, each at a distance from E equal to the radius of the roller on which the cam is to act. Draw HJ parallel to FG at a distance from it equal to the depth of the groove. Through F and G draw lines to the point L where MN intersects the axis XX'. That portion of the line HJ intersected between FL and GL will be the width of the groove at the bottom. Before it is possible to proceed further in the construction of this side elevation of the cam, it is necessary to make a development of its outer surface. Draw the line $M'N'$ equal in length to the circumference of the cylinder.

Lay off $M'B'$ equal to the length of the arc YB and $B'Y'_2$ equal to the length of the arc BY'. Divide $B'Y'_2$ into any even number of equal parts, in this case eight, and letter points of division a', b', c', d', e', f', and g'. Through the points thus found draw vertical lines. On the vertical line through M' lay off $M'8$ equal to the distance through which the follower is to move, and divide $M'8$ into "gravity" divisions, using as many divisions as there are equal divisions in $B'Y'_2$. Mark the points thus found 1, 2, 3, 4, 5, 6, 7. From 1 project across to the vertical through a'. From 2 project to the vertical through b', and so on, thus getting the points 9, 10, 11, 12, 13, 14, 15, and 16. A smooth curve drawn through these points will be the development of the center line of that portion of the cam groove which moves the follower to the right. Make Y'_2T' equal to the length of the arc $Y'T$. The development of the center line of the groove between the verticals at Y'_2 and

T' is a horizontal straight line. Since the return motion of the follower is a duplicate of the forward motion, the curve 17 N', being a duplicate of the curve B' 16, will be the development of the center line of that portion of the cam groove which moves the follower back to its original position.

The above construction gives a development of the center line of the groove on the outer surface of the cylinder. The lines forming the development of the sides of the groove are smooth curves drawn tangent to arcs, swung about a series of centers along the line $M'B'$ 16 17 N' with radii equal to the radius of the large end of the roller as shown in the drawing. Similar curves drawn tangent to arcs swung about the same centers with a radius equal to the radius of the large end of the roller, plus the thickness of the flange forming the sides of the groove, will be the development of the outer edges of these flanges.

The development of the corners of the bottom of the groove is constructed in the same way, except that the length of the development is less, because it is a development of a cylinder of smaller radius.

The projections (on the side elevation) of the curves which have just been developed are drawn by finding the projections corresponding to points r', s', t', v', where these curves cut the vertical line, it being borne in mind that the vertical lines on the development really represent the developed positions of elements of the cylinder, drawn through points a, b, c, etc., which are found by dividing the arcs BY' and TY into divisions equal to the divisions in $B'Y'_2$ and $T'N'$. The construction for the points r', s', t', and v' only will be followed through as the construction for all other points will be exactly similar. Through b on the end view draw an element of the cylinder across the side elevation. From b, where this element intersects MN, lay off bt equal to $b't'$, bv equal to $b'v'$, to the right of MN since t' and v' are above $M'N'$, and bs equal to $b's'$ and br equal to $b'r'$, to the left since s' and r' are below $M'N'$. The points r, s, t, v, are the projections of points corresponding to r', s', t', v'. Projections of all other points where the curves intersect the verticals on the development are found in exactly the same way, and smooth curves drawn through the points thus found will be the projections of the corners of the groove, and of the flange enclosing the groove. The projections of the corners of the bottom of the groove are obtained in the same way also, using, of course, elements through a_2, b_2, etc., instead of a and b.

11–10. Multiple-Turn Cylindrical Cam. Fig. 11–30 shows a cylindrical cam which requires two revolutions to complete the full cycle of motion of its follower. The method of designing such a cam would be similar in principle to that described for the simple cam in Fig. 11–29.

The follower in a case like this will require a special form in order to pass properly the places where the groove crosses on itself. This is suggested in Fig. 11–31. The follower F is made to fit the groove sidewise, and is arranged to turn in the sliding rod, to which it gives motion in a line parallel with the axis of the cam. The guides for this rod are attached to the bearings of the cam, A and B, which form a part of the frame of the machine. A plan of the follower is shown at G: its elongated

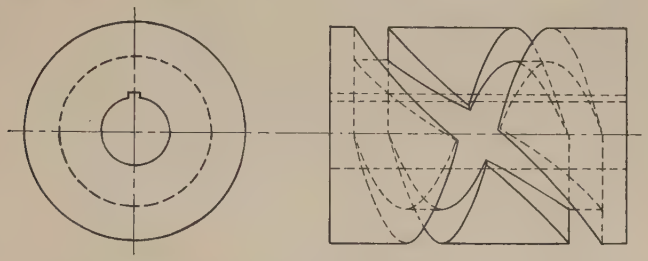

Fig. 11–30

shape is necessary so that it may properly cross the junctures of the groove. In this cam there is a period of rest during one-half a turn of the cam at each end of the motion; the motion from one limit to the other is uniform, and consumes one and one-half uniform turns of the cam.

The cylinder may be increased in length, and the groove may be made of any desirable lead; the period of rest can be reduced to zero, or in-

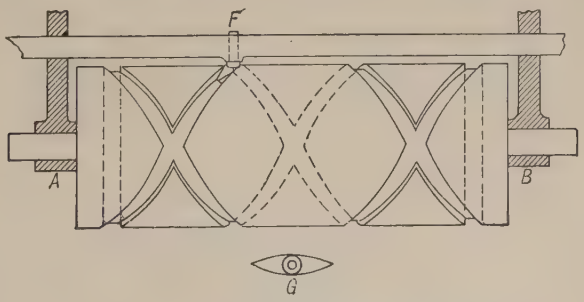

Fig. 11–31

creased to nearly one turn of the cam. A cylindrical cam, having a right- and a left-hand groove, is often used to produce a uniform reciprocating motion, the right- and left-hand threads, or grooves passing into each other at the ends of the motion, so that there is no period of rest.

The period of rest in a cylindrical cam, like that shown in Fig. 11–31, can be prolonged through nearly two turns of the cylinder by means of the device shown in Fig. 11–32. A switch is placed at the junction of

the right- and left-hand grooves with the circular groove, and it is provided that the switch shall be capable of turning a little in either direction upon its supporting pin, while the pin is capable of a slight longitudinal movement parallel with the axis of the cylinder. This supporting pin is constantly urged to the right by a spring, shown in *A*, which acts on a slide carrying the pin; when the mechanism is in this position the space *a* between the switch and the circular part of the groove is too small to allow the follower to pass, and when the follower is in the position shown in *B*, the spring is compressed; then, if the follower moves on, the space behind it is closed, as the spring will tend to push the support to the right, and swing the switch on the follower as a fulcrum.

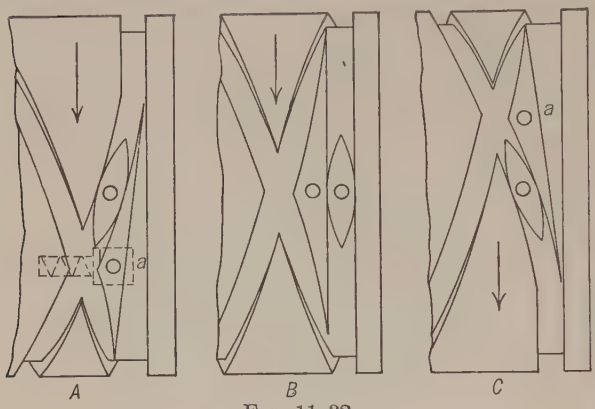

FIG. 11–32

If the cam turns in the direction of the arrow, in *A* the shuttle-shaped follower is entering the circular portion of the groove, and leaves the switch in a position which will guide the follower into the circular groove when it again reaches the switch; in *B* the switch is pressed toward the left to allow the follower to pass. As motion continues, the support of the switch is pressed to the right, and the switch is thrown in to the position shown in *C* ready to guide the shuttle into the returning groove. The period of rest in this case continues for about one and two-thirds turns of the cylinder.

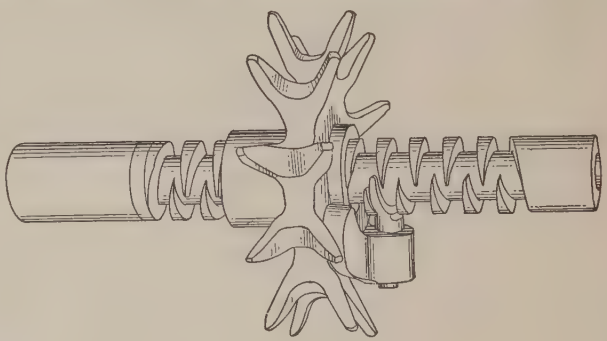
FIG. 11–33

Fig. 11–33 shows an arrangement which may be applied for guiding a wire or cord as it winds upon a spool. The hub of the sheave is bored to fit the outside of the shaft. The shaft is stationary and

has a right-hand groove and a left-hand groove cut in it, and is therefore a stationary cylindrical cam. On the side of the sheave is a projection which supports the pin on which the specially constructed follower is carried. The wire or cord, passing over the sheave, causes it to turn, and as it turns it receives a reciprocating motion along the axis of the cam.

11–11. Cylindrical Cam Acting on a Lever. If the follower for a cylindrical cam is a pin or roller on the end of a lever, so that it moves in an arc instead of a straight line, as in Fig. 11–34, an exact construction would require that allowance be made for the curvature of the path when making the development. This degree of refinement is usually unnecessary, from a practical point of view, and the cam may be designed on the assumption that the path of the follower is a straight line parallel to the elements of the cylinder.

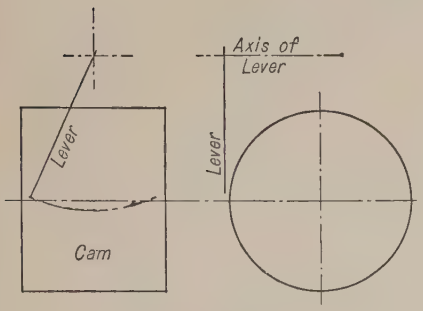

Fig. 11–34

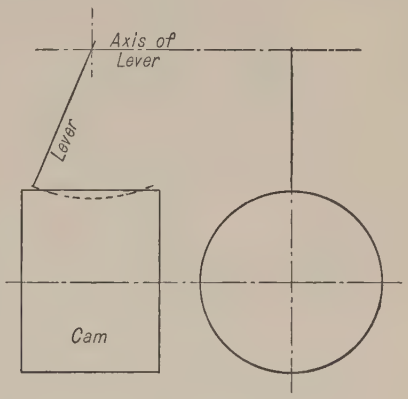

Fig. 11–35

If the lever is in a plane passing through the axis of the cam, as in Fig. 11–35, the end of the lever may be considered as one tooth of a worm wheel or helical gear, and be given the form of such a tooth. The cam itself then corresponds to the worm or to the mating helical gear except that its groove is not necessarily helical.

11–12. Combinations of Two or More Cams. In various automatic machines the movements of parts which have to be timed with respect to each other are often obtained by means of two or more cams properly designed, and properly adjusted to give each piece its desired motion at the required time. Fig. 11–36 shows how a cylindrical cam and a plate cam might be arranged to work in combination with each other. In this case the cylindrical cam makes two revolutions for every one of the plate cam. The cylinder R is caused to swing back and forth by the lever S which, in turn, is operated by the plate cam.

With the mechanism in the position shown, the cylindrical cam makes

one-eighth turn in the direction shown, after which the pin T starts to move to the right with harmonic motion. T moves to the right the total distance of $1\frac{3}{8}$ in., during three-eighths of a turn of the cylindrical cam, after which it remains at rest for one-eighth turn of the cam, then returns to its original position during the remaining three-eighths turn. The plate cam is so designed that, turning left handed as shown, the cylinder R begins to turn after T has moved to the right $\frac{3}{4}$ in. It continues to turn with uniformly accelerated and uniformly retarded motion until T gets back again to within $\frac{3}{4}$ in. of its left-hand position.

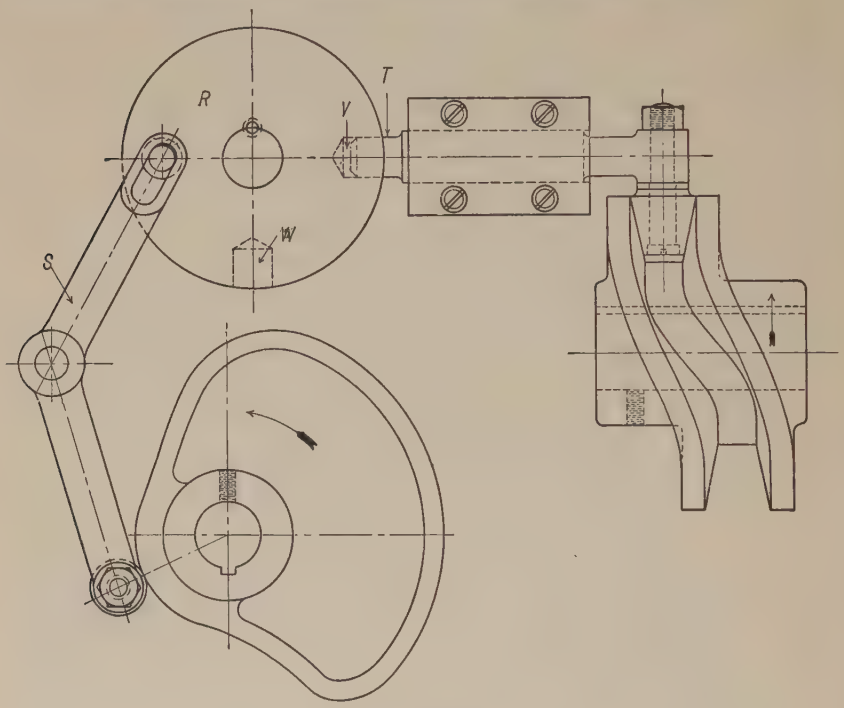

Fig. 11–36

The hole W will then be in the position now occupied by the hole V. R will then stop its motion and T will be inserted into the hole W. During the next revolution of the cylindrical cam T has a motion the same as before, and the plate cam swings the cylinder R back to its original position.

11–13. Velocity and Acceleration of Follower. In many mechanisms the velocity and acceleration of a cam follower are important factors, particularly the acceleration. Hence it is necessary to be able to determine with reasonable accuracy just how these properties vary during

the cycle of motion. The usual method is to find the velocity and acceleration at the end of different successive intervals of time (or cam motion), and plot curves.

If the cam is of such shape that the displacement of the follower may be readily expressed as a function of time, or angular motion of the cam, the velocity may be found by differentiating the expression for the displacement, and the acceleration by differentiating the expression for the velocity.

If the shape of the cam is given, but nothing is known about the character of the motion of the follower, a graphical investigation may be made by drawing the cam in a series of positions, measuring the corresponding displacements of the follower, plotting a displacement-time curve, and obtaining the velocity and acceleration from this curve as explained in § 2–30, Example 1.

Again, the velocity curve may be obtained by resolution of velocity by vectors, and the acceleration from the velocity curve.

In some cases it is possible to obtain the acceleration directly from the drawing by means of acceleration vectors, applying the principles discussed in Chapter V.

The following examples illustrate typical cases.

Example 7. Given a plate cam turning at uniform angular speed of ω radians per second. The cam causes its follower to start from rest and move in a straight line with constant positive acceleration for half its stroke and constant negative acceleration for the remainder of its stroke. The total stroke of the follower is L inches, and it takes place while the cam turns through an angle β.

To find the magnitude of the acceleration; also find the velocity after the follower has been in motion t seconds, the angular displacement of the cam at this time being $\theta = \omega t$.

From Chapter II, equation (14)

$$s = \frac{1}{2}at^2 = \frac{a\theta^2}{\omega^2}, \quad \text{since} \quad t = \frac{\theta}{\omega}. \quad \text{When} \quad s = \frac{L}{2}, \theta = \frac{\beta}{2}. \quad \text{Then}$$

$$\frac{L}{2} = \frac{a\beta^2}{4\omega^2}$$

Therefore

$$a = \frac{2L\omega^2}{\beta^2}$$

$$v = at = a\frac{\theta}{\omega} = \frac{2L\theta\omega}{\beta^2}$$

Example 8. In Fig. 11–37 is shown the pitch line of that portion of a cam which, turning left handed, raises the axis of a roller on the follower from A to B with simple harmonic motion while the cam turns through the angle β. The constant angular speed of the cam is ω radians per second.

To find the velocity and acceleration of the follower for angular displacement θ of the cam. At this time the axis A will be at A_1, found by making $\phi = \frac{\pi\theta}{\beta}$. Then

from Chapter II, equation (23), noting that θ in this equation corresponds to ϕ in Fig. 11–37,

$$v_A = \omega_{OE} \times \frac{L}{2} \sin \phi$$

But $$\omega_{OE} = \frac{\omega\pi}{\beta} \quad \text{and} \quad \phi = \frac{\pi\theta}{\beta}$$

Then $$v_A = \frac{\omega\pi}{\beta} \times \frac{L}{2} \sin \frac{\pi\theta}{\beta}$$

Similarly $$a_A = \omega_{OE}^2 \times \frac{L}{2} \cos \phi$$

$$= \frac{\omega^2\pi^2}{\beta^2} \times \frac{L}{2} \cos \frac{\pi\theta}{\beta}$$

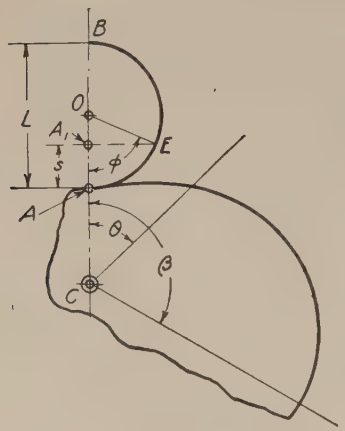

Fig. 11–37

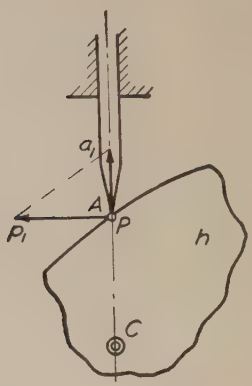

Fig. 11–38

Example 9. In the cam shown in Fig. 11–18 based on equation (2), page 271, let ω be the angular speed of the cam. To find the velocity and acceleration of A for any known angular displacement θ of the cam.

Solution. Since, from equation (2)

$$s = \frac{L\theta}{\beta} - \frac{L}{2\pi} \sin \frac{2\pi\theta}{\beta}$$

$$= \frac{L\omega t}{\beta} - \frac{L}{2\pi} \sin \frac{2\pi\omega t}{\beta}$$

$$v_A = \frac{ds}{dt} = \frac{L\omega}{\beta} - \frac{L\omega}{\beta} \cos \frac{2\pi\omega t}{\beta} = \frac{L\omega}{\beta}\left(1 - \cos \frac{2\pi\theta}{\beta}\right)$$

$$a_A = \frac{d^2s}{dt^2} = \frac{2\pi L\omega^2}{\beta^2} \sin \frac{2\pi\omega t}{\beta}$$

$$= \frac{2\pi L\omega^2}{\beta^2} \sin \frac{2\pi\theta}{\beta}$$

Example 10. Fig. 11–38 shows a portion of the outline of a plate cam acting on the point A of a follower. If ω_h is the angular speed of the cam, the velocity of P on the cam is $v_p = \omega_h \cdot CP$. Drawing the vector Pp_1 perpendicular to CP and of length to represent v_p, and resolving it into components parallel to the tangent to the cam curve and to the direction of the motion of A, gives Aa_1 as the velocity of A and P_1a_1 as the rate at which A is sliding on the cam surface.

By repeating this process for a series of positions of the cam a velocity-time curve for the follower may be plotted from which by graphical differentiation the acceleration may be obtained.

Example 11. Given a cam of the type shown in Fig. 11–39

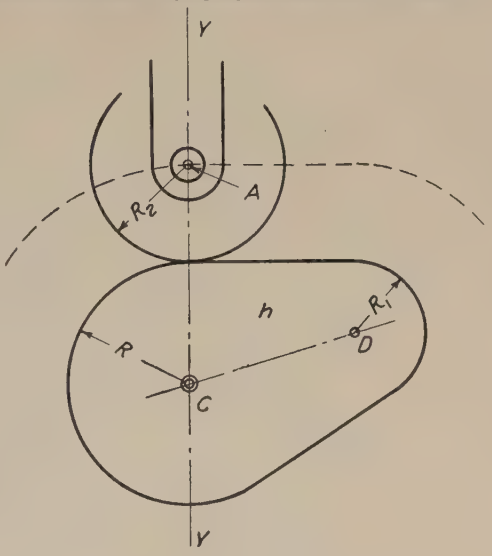

Fig. 11–39

turning at uniform speed ω_h and acting on a roller of radius R_2. The axis of the roller is guided in the straight line YY. To find the acceleration of A. There are two cases: (1) when the straight portion of the cam is on the follower; (2) when the circular tip of radius R_1 is acting. In either case, since A is the point to be considered the problem will be simplified by assuming that $R_2 = 0$ and enlarging the cam to pass through A as suggested by the dotted line. When the follower rests on the part of the cam which is circular about C, $v_A = 0$ and $a_A = 0$. Both cases 1 and 2 can be solved by a combination of graphical construction and computation or entirely by computation.

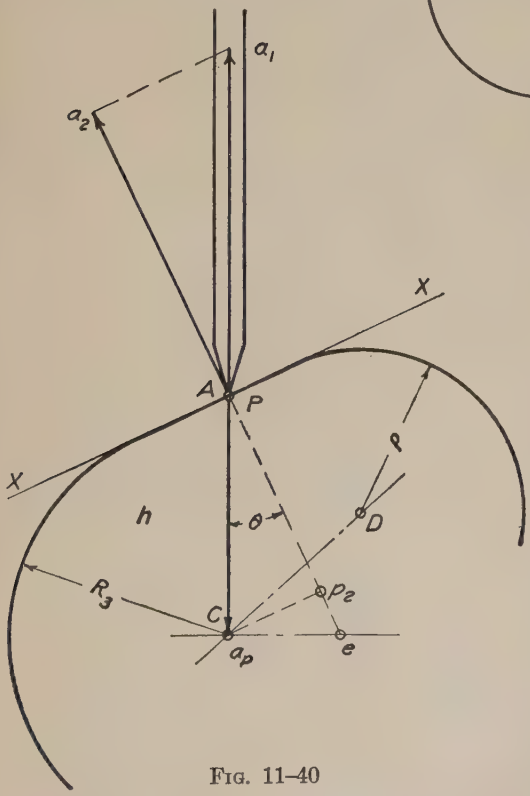

Fig. 11–40

Case 1. Fig. 11–40. Let θ = angle through which cam has turned since A was in its lowest position. h represents the cam. $a_p = \omega_h^2 \cdot CP$. Assume that $\omega_h = 1$. Then

$a_p = CP$, and the total component of a_p along the normal to the cam surface is Pp_2. Find e, the point on h which has the same velocity as a. (See § 4–11.) From Chapter V, equation (19), $a_A{}^{NP} = 2\ Ae \cdot \omega_h{}^2$. Measure Ae, compute $a_A{}^{NP}$, and

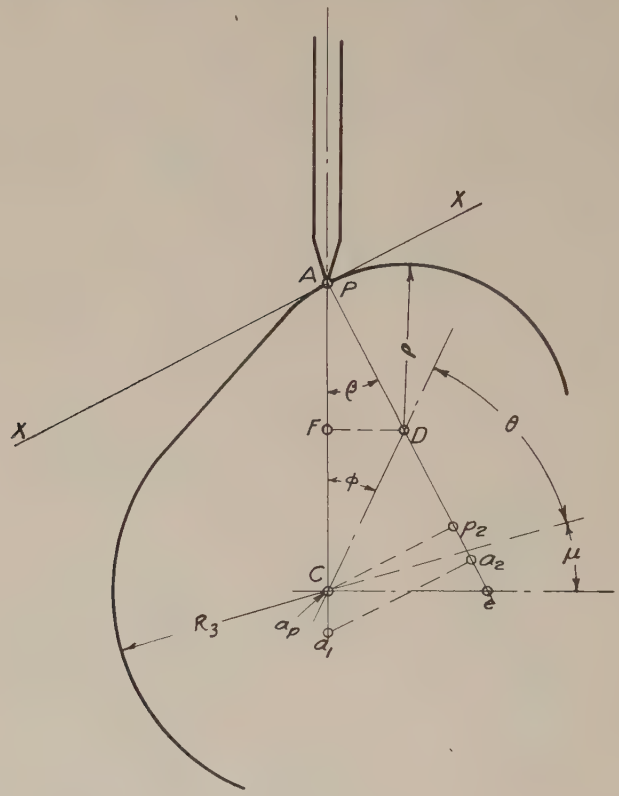

FIG. 11–41

lay off from p_2 in sense eA, thus getting a_2 (that is, $p_2a_2 = a_A{}^{NP}$). Then Aa_2 is the total component of a_A along the normal to the cam surface. Draw a_2a_1 perpendicular to Aa_2, giving $Aa_1 = a_A$ for $\omega_h = 1$. To compute Aa_1 $(= a_A)$:

$$CP = \frac{R_3}{\cos\theta},\ a_p = \omega_h{}^2 \cdot CP;\quad Pp_2 = \omega_h{}^2 \cdot CP\cos\theta = \omega_h{}^2 R_3$$

$$Ae = \frac{CP}{\cos\theta} = \frac{R_3}{\cos^2\theta}$$

Hence $a_A{}^{NP} = 2\,\omega_h{}^2 \cdot \dfrac{R_3}{\cos^2\theta}$ and $Aa_2 = 2\,\omega_h{}^2 \cdot \dfrac{R_3}{\cos^2\theta} - \omega_h{}^2 R_3$, or

$$Aa_2 = \omega_h{}^2 R_3\left[\frac{2}{\cos^2\theta} - 1\right]$$

Therefore $a_A\ (= Aa_1) = \dfrac{\omega_h{}^2 R_3}{\cos\theta}\left[\dfrac{2}{\cos^2\theta} - 1\right] = \dfrac{\omega_h{}^2 R_3}{\cos^3\theta}[2 - \cos^2\theta]$

Case 2. Fig. 11–41. $\phi = 90° - (\theta + \mu)$. Assume that $\omega_h = 1$. Then the total component of a_p along the normal to the cam surface is Pp_2. From Chapter V, equation (18),

$$a_A{}^{NP} = \frac{(Ae \cdot \omega_h)^2}{\rho} - 2\,Ae \cdot \omega_h{}^2$$

From the method of deriving this equation it is seen that $a_A{}^{NP}$ is in sense Ae if its value is + and in sense eA if −. Lay off $p_2a_2 = a_A{}^{NP}$, and draw a_2a_1 perpendicular to Aa_2. Then $Aa_1 = a_A$ for $\omega_h = 1$. The magnitude of a_A can be computed from the following equation:

$$a_A = \omega_h{}^2 \cdot CP\left[\frac{CP}{\rho \cos^3 \beta} - \frac{2}{\cos^2 \beta} + 1\right] \qquad \text{(I)}$$

in which β can be found from $\sin \beta = \dfrac{CD \sin \phi}{\rho}$, and $CP = CD \cos \phi + \rho \cos \beta$.

Proof. $p_2a_2 = \omega_h{}^2\left(\dfrac{\overline{Ae}^2}{\rho} - 2\,Ae\right)$ as above. And $Pp_2 = \omega_h{}^2 \cdot CP \cos \beta$.

Therefore $$Aa_1 = \omega_h{}^2\left[\frac{\overline{Ae}^2}{\rho} - 2\,Ae + CP \cos \beta\right] \div \cos \beta$$

But $Ae = \dfrac{CP}{\cos \beta}$. Hence

$$Aa_1 = \omega_h{}^2\left[\frac{\overline{CP}^2}{P \cos^2 \beta} - \frac{2\,CP}{\cos \beta} + CP \cos \beta\right] \div \cos \beta$$

or $$Aa_1\ (= a_A) = \omega_h{}^2 \cdot CP\left[\frac{CP}{\rho \cos^3 \beta} - \frac{2}{\cos^2 \beta} + 1\right]$$

as stated in equation (I) above.

Again: $CP = CF + FP$, $CF = CD \cos \phi$, $FP = \rho \cos \beta$

Hence $CP = CD \cos \phi + \rho \cos \beta$.

A somewhat simpler solution for case 2 is to consider CD and DP as the crank and coupler of a four-bar linkage with A as the slider. Then determine the acceleration of A by one of the methods given for a four-bar linkage in Chapter V.

Example 12. In Fig. 11–42 the cam h turns at constant angular speed ω_h about the fixed axis C. Follower m is guided in a straight path perpendicular to surface XX. To find a_m. There are two cases:

1. When m rests on arc R_1. Since the point of tangency A is always directly over Z the motion of m is the same as the vertical components of the motion of Z (i.e., simple harmonic), and $a_m = \omega_h{}^2 \cdot CZ \cos \theta$.

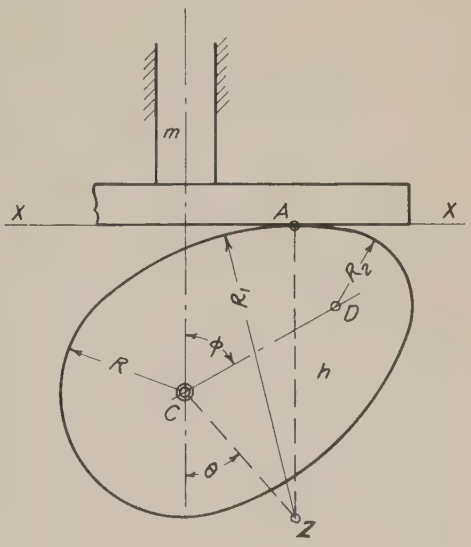

Fig. 11–42

2. When m rests on arc R_2, $a_m = \omega_h{}^2 \cdot CD \cos \phi$.

Example 13. In Fig. 11–43, the same cam as in Fig. 11–42 is shown acting on the flat surface of a lever g which swings about the axis Z; g in turn actuates m through the cylindrical foot whose center of curvature is A. To find a_m.

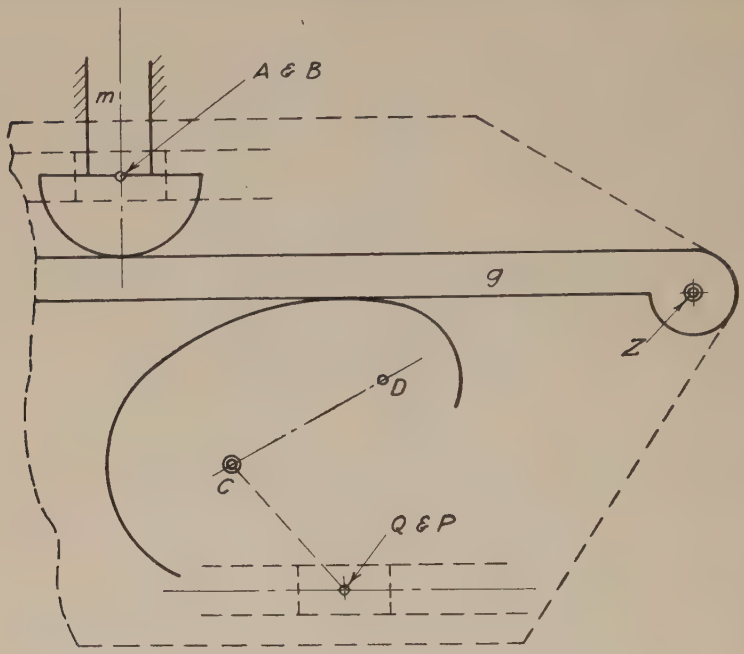

FIG. 11–43

First substitute for the cam and actual lever the equivalent mechanism shown dotted, with blocks at Q and A. P and B are points on g. Find V_p by velocity vectors. Then $\omega_g = \frac{V_p}{ZP}$. Next find a_p as shown in Chapter VI, Fig. 6–28. From a_p find $a_p{}^{TZ}$. Then $\alpha_g = \frac{a_p{}^{TZ}}{ZP}$. α_g and ω_g being known, the acceleration of point B can be found. From a_B find a_A by the reversal of the process used for finding a_p. Since all points on m have the same velocity at all times, a_A is the acceleration of every point on m.

PROBLEMS

XI–1. Referring to Fig. 11–8, design the pitch line of a cam to raise point of the follower from A to B with "gravity" motion (uniform acceleration for $\frac{1}{2}$ in. and uniform retardation for $\frac{1}{2}$ in.) while the cam turns 120°, hold it at rest for 60°, allow it to return to its original position with gravity motion while the cam turns 120°, and hold it at rest for the remainder of the cycle.

XI–2. Referring to Fig. 11–10, let the axis of the roller when in its lowest position be 2 in. above the axis of the cam shaft. The roller is $1\frac{1}{4}$ in. in diameter. Design a cam to raise the follower $1\frac{1}{2}$ in. with harmonic motion while the cam turns 150°, hold it at rest for 60°, and return it to its original position during the remaining 150° motion of the cam, with harmonic motion.

XI–3. Draw the pitch line of a plate cam turning uniformly right handed to give motion to a point on a straight line passing 1 in. to the left of the axis of the cam. The highest position of the point to be on a plane $2\frac{3}{4}$ in. above the axis of the cam. The motion of the follower is to be down 1 in. with harmonic motion in $\frac{1}{4}$ revolution; still $\frac{1}{4}$ revolution; down $\frac{1}{2}$ in. at once; up $1\frac{1}{2}$ in. with harmonic motion in $\frac{1}{2}$ revolution. After finding pitch line of cam, find the proper shape of the cam if a roller $\frac{3}{4}$ in. in diameter is used on follower.

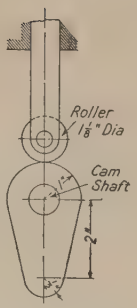

PROB. XI–4

XI–4. What will be the distance between the axis of the cam and the axis of the roller after the cam has turned 150° from the position shown?

XI–5. Referring to Fig. 11–12, let $N = 1\frac{1}{2}$ in., $D = 1\frac{1}{2}$ in. The roller is $1\frac{1}{4}$ in. in diameter. Design a cam to raise the follower with harmonic motion $1\frac{1}{2}$ in. while the cam turns 180° and return it to its original position with harmonic motion while the cam turns the remaining 180°.

XI–6. Same data as XI–5 except that the motion of the follower is to conform to the equation

$$s = \frac{L}{\pi}\left(\frac{\pi\theta}{\beta} - \frac{1}{2}\sin\frac{2\pi\theta}{\beta}\right)$$

in which L is the total stroke of the follower and β the angle through which the cam turns to cause the follower to move the distance L.

XI–7. The plate cam with axis at C consists of the arcs of three circles with centers and radii as shown. Cam turns uniformly left handed. Draw a diagram which shall show the motion of the follower, ordinates to be distance moved by the follower (full size), and abscissas to represent angular motion of the cam ($\frac{1}{4}$ in. = 30°). Take points every 30° with an extra point at 225°.

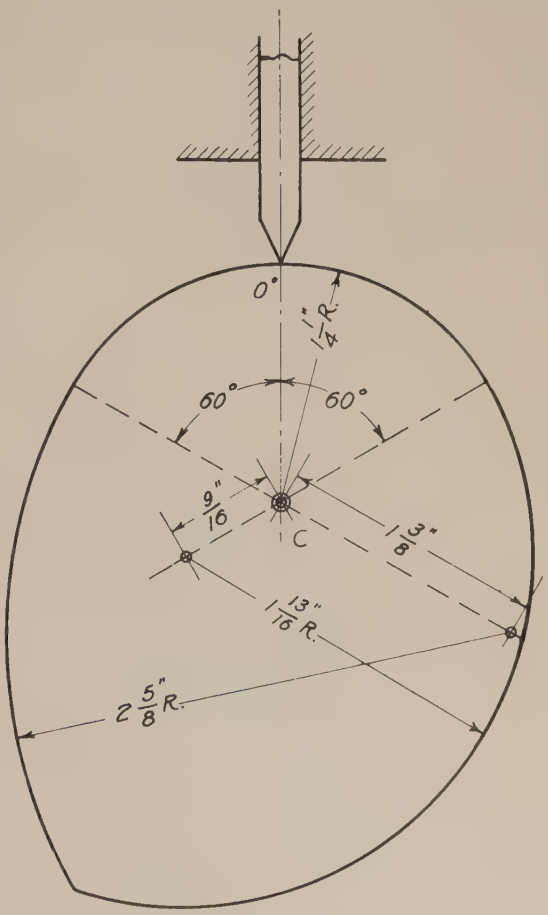

PROB. XI–7

XI–8. Find the outline of a plate cam which, by turning about the center C as shown by the arrow, shall cause a point A to move along the path A–B at a uniform speed as follows: $\frac{6}{10}$ the distance A–B in $\frac{1}{4}$ turn of the cam. Still $\frac{1}{3}$ turn. Remaining part of the distance in $\frac{1}{6}$ turn. Return to A at once over the same path as previously traversed. Still $\frac{1}{4}$ turn. (Take 10 intervals in the distance A–B.) Cam to be full size.

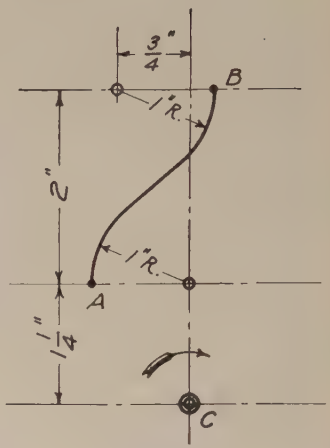

PROB. XI–8

XI–9. Starting from the position shown, the slide is to drop 2 in. with harmonic motion during $\frac{3}{8}$ of a turn, to rise at once 1 in., to remain still $\frac{1}{8}$ of a turn, to drop 2 in. with uniformly accelerated and uniformly retarded motion in $\frac{1}{2}$ turn, and then to rise

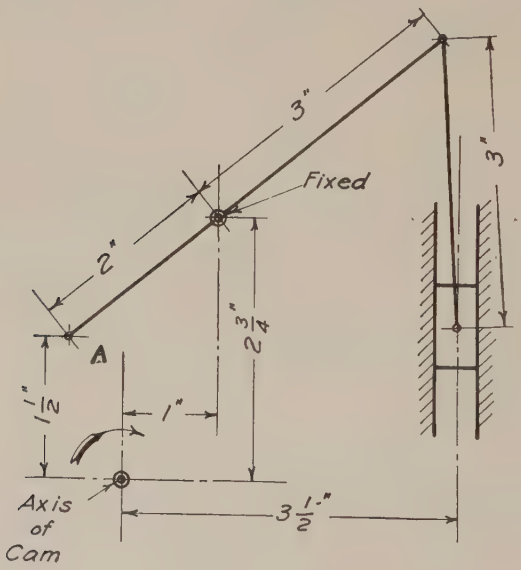

PROB. XI–9

3 in. at once. Find the cam outline if the end A of the lever is in contact with the cam, the latter to turn in the direction shown. (Assume that A is kept in contact with the cam by some external force.)

XI–10. Find the outline of a plate cam turning uniformly right handed to give block A the following motion: remain still $\frac{1}{12}$ turn, rise 1 in. with harmonic motion in $\frac{1}{3}$ turn, still $\frac{1}{3}$ turn, drop $1\frac{3}{8}$ in. at once, rise $\frac{3}{8}$ in. uniformly in $\frac{1}{4}$ turn. Cam is to drive roller B 1 in. in diameter.

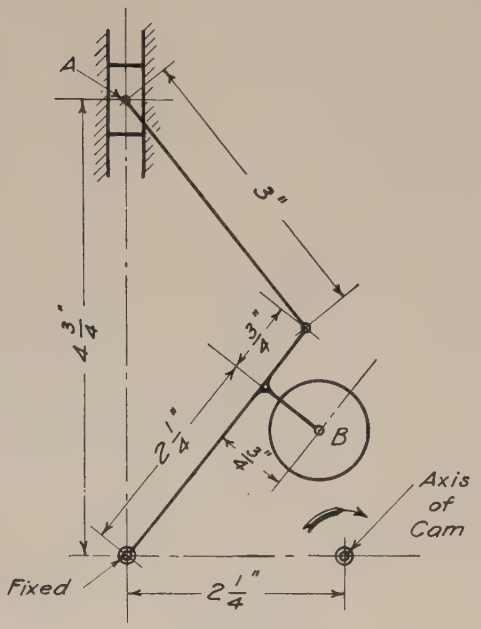

PROB. XI–10

XI–11. Piece A carries a pin which projects into the slot on the horizontal piece B. Find outline of a plate cam turning uniformly right handed to act at D and give A the

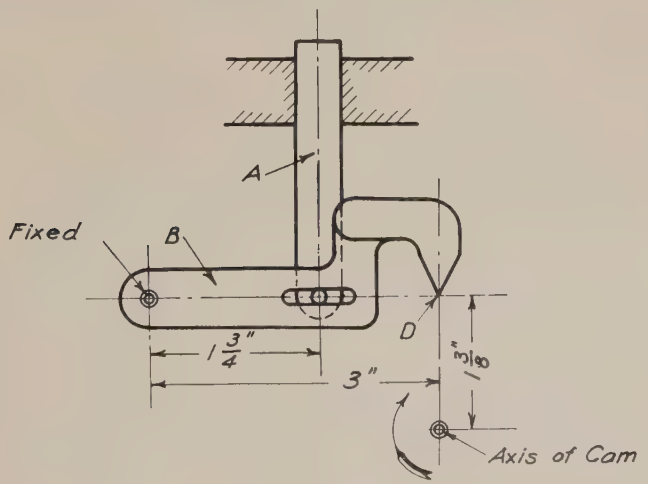

PROB. XI–11

following motion: still for $\frac{1}{4}$ turn of cam; up $1\frac{1}{2}$ in. with harmonic motion in $\frac{1}{4}$ turn; still $\frac{1}{4}$ turn, drop $1\frac{1}{2}$ in. at once, and still $\frac{1}{4}$ turn.

XI–12. *A* and *B* are two rollers ($\frac{3}{4}$-in. diameter) attached to the same frame. The rollers are in the same plane, and both are always to be in contact with a single plate cam. Find the outline of the cam if the frame is to be raised 1 in. with harmonic motion in $\frac{1}{2}$ turn of the cam. What will be the motion of the follower during the remaining $\frac{1}{2}$ turn of cam?

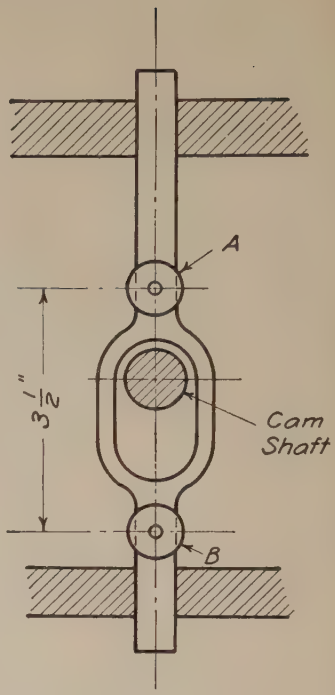

PROB. XI–12

XI–13. This plate cam is made up of arcs of two circles and their common tangents, and turns about the fixed center *A*. Plot a curve showing the motion of the follower for every 15° movement of the cam for $\frac{1}{4}$ turn. Scale of plot is to be as follows: abscissas = angles turned by cam, $\frac{3}{8}$ in. = 15°. Ordinates = full-size displacements of the follower.

Make, on the same plot, a curve that would show the displacements of the follower, if its motion had been harmonic.

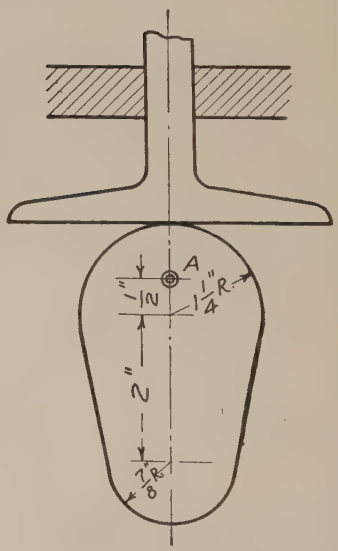

PROB. XI–13

XI–14. Referring to Fig. 11–21, a cam turning uniformly in a clockwise direction, on the axis E, is to give the following motion to the follower S, the lowest position of the flat surface of S being 2 in. above E: up 2 in. with harmonic motion in $\frac{1}{4}$ turn of the cam, down 1 in. with harmonic motion in $\frac{1}{4}$ turn, still $\frac{1}{4}$ turn, down 1 in. with harmonic motion in $\frac{1}{4}$ turn. Find the shape of the cam.

XI–15. Referring to Fig. 11–22, the cam turns in a clockwise direction on axis C, the pivot P for the lever R is $2\frac{1}{2}$ in. to the right and 3 in. above C. The radius of the end of the slider S is $\frac{3}{4}$ in. The center line of the slide S is 3 in. to the left of C and when in its lowest position, its lowest point is 2 in. above C. T is 1 in., and a line parallel to the top surface of R and $\frac{1}{2}$ in. below it will pass through the pivot P. S moves up 3 in. with uniformly accelerated and uniformly retarded motion in $\frac{1}{3}$ turn of the cam, still $\frac{1}{6}$ turn, down 3 in. with uniformly accelerated and uniformly retarded motion in $\frac{1}{3}$ turn, still $\frac{1}{6}$ turn. Find the shape of the cam.

XI–16. A cylindrical cam 3 in. outside diameter (turning right handed as seen from the right) is to move a roller. Roller is above and moves parallel to the axis of the cam. Roller moves as follows: to right with harmonic motion $1\frac{1}{4}$ in. in $\frac{1}{3}$ turn of cam; still for $\frac{1}{6}$ turn; to left with harmonic motion $1\frac{1}{4}$ in. in $\frac{1}{3}$ turn; still for $\frac{1}{6}$ turn. The roller is to be $\frac{3}{4}$ in. in diameter at the large end and of such form as to give pure rolling contact. Groove in cam is to be $\frac{3}{4}$ in. deep. Draw development for both top and bottom of groove of the part of cam which causes the motion to take place.

XI–17. The arm AP swings on a bearing at A. A is on a slide moving horizontally. The motion of the slide is controlled by a cylindrical cam (not shown), and the swing of the arm by a plate cam acting on roller R as shown. The point P is to move from the position shown, as follows: horizontally to right 3 in. with uniformly accelerated and retarded motion in 4 sec; still 1 sec; swing down (while A remains stationary) a vertical distance of 4 in. with uniform motion in 3 sec; along a straight line (up and left) back to starting position with harmonic motion in 4 sec. Plate cam turns 5 rpm. Design the plate cam. Draw full size.

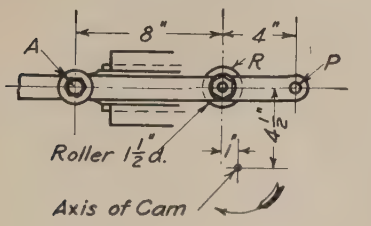

PROB. XI–17

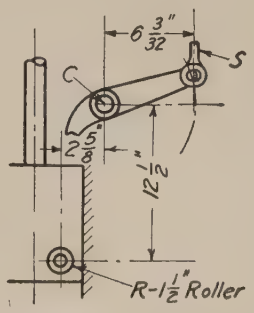

PROB. XI–18

XI–18. The ram of a steam hammer carrying the roller R rises 10 in. with uniform speed. Design an oscillating cam turning on the fixed center C which will move the valve rod S down 3 in. with uniformly accelerated and retarded motion during the rise of the ram. Draw full size.

CHAPTER XII

INCLINED PLANE, WEDGE, SCREW

12–1. Inclined Plane and Wedge. The inclined plane and wedge will be considered only as mechanical elements for producing motion or exerting force. In this sense they act essentially the same. In Fig. 12–1, P represents a wedge, or solid, whose lower surface mn is horizontal, resting on a horizontal surface XX and free to be moved along that surface. The upper surface mo is inclined at an angle with the horizontal. In Fig. 12–1 the back surface no is perpendicular to mn. S is a slide which may move up or down in the guides G, the lower end being inclined or beveled at the same angle as the upper surface of P, on which it rests. Suppose that P is moved to the left a distance mm_1, so as to occupy the position shown by the dotted lines. It is evident that S is forced up a distance dd_1. If the length b and height a of P are known, it is possible to calculate the amount S will move for any known movement of P. Draw a vertical line mt meeting m_1o_1 at t. Then $mt = dd_1$ since they are sides of a parallelogram. The triangles m_1mt and $m_1n_1o_1$ are evidently similar. Therefore

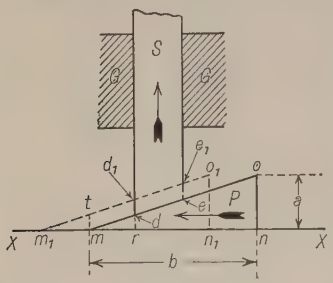

FIG. 12–1

$$\frac{mt}{o_1n_1} = \frac{mm_1}{m_1n_1}$$

But $$o_1n_1 = on$$

$$mt = dd_1$$

and $$m_1n_1 = mn$$

Therefore $$\frac{dd_1}{on} = \frac{mm_1}{mn}$$

or $$dd_1 = mm_1 \times \frac{on}{mn} = mm_1 \tan omn \qquad (1)$$

or, in words, *the distance the slider rises is equal to the distance the wedge moves multiplied by the ratio of the height of the wedge to its length.*

In Fig. 12–2 a wedge is shown in which the end no is not perpendicular to mn. The same method of calculating the rise of the slider S would

be used as in the previous case except that the vertical height *ok* is used in place of the length *no*, the shape of the back end of course having no effect on the motion of *S*.

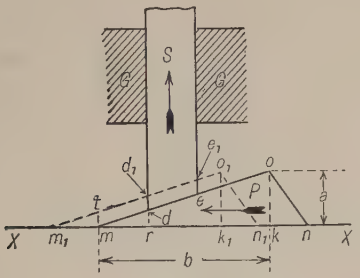

FIG. 12–2

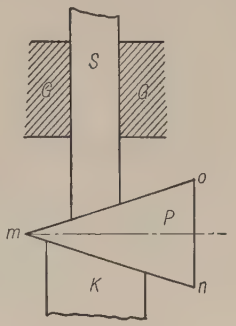

FIG. 12–3

The wedge in Fig. 12–3 is itself raised when pushed to the left, owing to its sliding upon the inclined stationary surface of *K*, and carries *S* up with it. It also gives an additional rise to *S* due to the slant of the surface *mo*. The resultant rise of *S* is, therefore, the sum of the two.

It should be noticed that the above laws hold true only when the direction of motion of the slider *S* is perpendicular to the direction in which the wedge moves.

12–2. Screw Threads. If the top surface *mo* of the wedge shown in Fig. 12–1 is assumed to be covered with a very thin strip of flexible material and this strip is wound around a cylinder whose circumference is equal to the length *b*, the angle of inclination with the horizontal remaining the same, it will assume a helical form as shown in Fig. 12–4. If the slide *S* has a point which reaches out and rests on the top surface of the strip, and the cylinder is turned in the direction of the arrow, *S* will be raised. The action of the helical surface on *S* is exactly the same as the action of the wedge in Fig. 12–1. One complete turn of the cylinder will raise *S* a distance of *P*. One-half a turn will raise *S* a distance $\frac{P}{2}$, and so on. In Fig. 12–5 a similar arrangement is shown, except that, in this case, *S* is stationary and the cylinder is free to move endwise as well as turn, the weight of the cylinder resting on the point of *S*

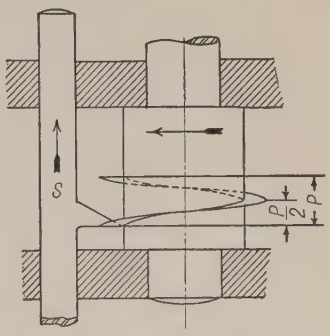

FIG. 12–4

through the helical blade. Now, if the cylinder is given one turn in the same direction as before, it will be lowered a distance P.

A more exact description of the surface would be to say that it is generated by a radial line always perpendicular to the axis of the cylinder and with its inner end in contact with a helix of lead = P on the surface of the cylinder.

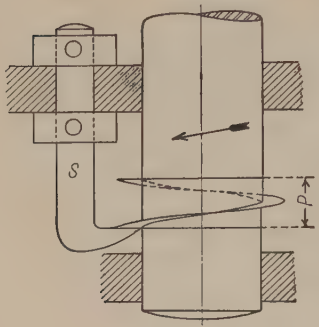

FIG. 12–5

Fig. 12–6 shows a cylinder with a strip wound around it in the same way as in the preceding figures, only the strip here is very much thicker and is wound around several times. In actually making such a cylinder of metal a solid cylinder would be taken and a helical groove cut around it, the metal left between the successive turns of the groove thus constituting the "helical strip." A cylinder so formed is called a **screw,** the projecting part, which we have called the helical strip, being known as the **screw thread.** The action of such a thread on its follower is exactly the same as just described for Figs.

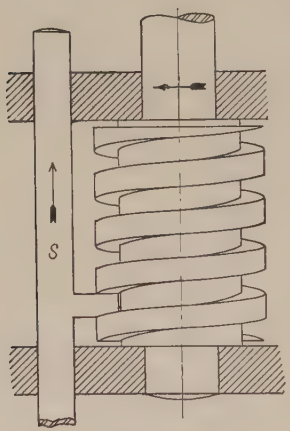

FIG. 12–6

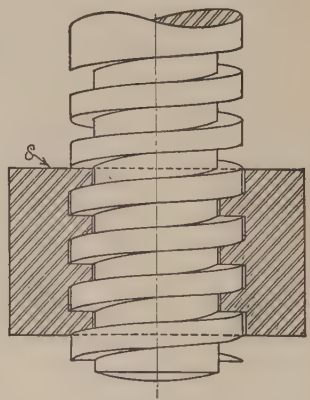

FIG. 12–7

12–4 or 12–5. Instead of using a single projecting point or surface for the thread to act against, as has been assumed in these figures, a hole with a corresponding thread inside it is formed, this thread being of the proper size, slant, and shape to just fit into the grooves of the screw. The piece which contains such a hole is known as a **nut.** (See Fig. 12–7.)

12–3. Forms of Screw Threads. There are several forms of threads in general use. The more common ones are shown in Figs. 12–8 to 12–11.

In Fig. 12–8 is shown the **square thread** used for supporting or moving a load as in a jack screw. In Fig. 12–9 is shown the thread ordinarily known as the **acme thread** which is similar to the square thread except that its sides slope slightly, giving a stronger thread and making it possible to open and close a split nut around it. Such a thread is used

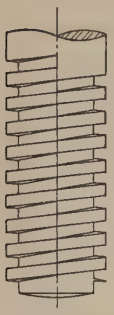

Fig. 12–8

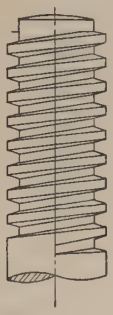

Fig. 12–9

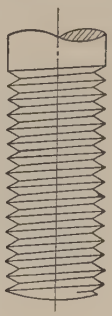

Fig. 12–10

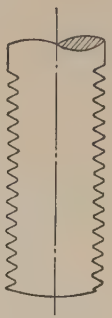

Fig. 12–11

on the lead screw of a lathe and in similar places where the screw moves the carriage and where it is necessary to separate the two halves of the nut on which it acts when it is desired to break the connection between the screw and the carriage.

Figs. 12–10 and 12–11 show the **V thread,** which is the kind commonly used on bolts, machine screws, and, in fact, for most purposes where the screw and nut serve for holding purposes. It is also used in light apparatus for causing motion. These two forms are alike except for a slight difference in the angle of the sides and a difference in shape at the point and root.

12–4. Single and Multiple Threads. All the threads shown in the preceding illustrations are single threads; that is, the threads are formed by the metal left between the successive turns of a single helical groove cut around and around the cylinder. If two parallel helical grooves are cut, the metal remaining will constitute a *double* thread; three parallel grooves will leave a *triple* thread, and so on. The single, double, and triple threads are illustrated in Figs. 12–12, 12–13, and 12–14, respectively. It will be noticed on the single thread (Fig. 12–12) that if the finger be placed on any point of the thread, as at A, and is moved along the thread until it has gone once around the screw, it will come to the point C. That is, in moving once around the screw the finger has advanced along the screw a distance AC. On the double thread (Fig. 12–13) if the finger starts at A and follows the thread once around, it will come to C, but this time there is a point D which lies between A and C. D is the point of the second or parallel thread. Similarly, if

the finger follows a thread in Fig. 12–14 once around from A to C, two points D and E will lie between A and C. A multiple thread may be used when there is need for a fine thread having a large " lead." (See § 12–5.)

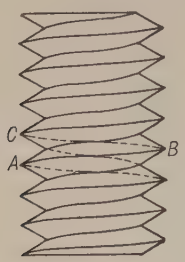

Single Thread

FIG. 12–12

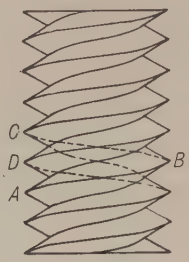

Double Thread

FIG. 12–13

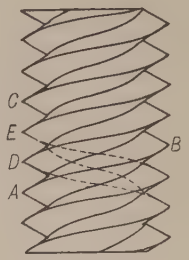

Triple Thread

FIG. 12–14

12–5. Lead and Pitch of a Screw. The distance AC which the thread advances along the screw in one turn around is sometimes called the **pitch.** A better name, however, is the **lead.** This definition of lead applies equally to single and multiple threads, while the term **pitch** is usually applied to the distance from one point to the next, regardless of the condition of the screw being single or multiple, and will be so used in this book. Lead is never used in this sense. In a single-threaded screw the lead and pitch are the same. If a nut is stationary and the screw is turned once around, it will move along through the nut a distance equal to the lead. If the screw is held from moving endwise but can turn, while the nut is held from turning but is free to move along the screw, one turn of the screw will move the nut a distance equal to the lead.

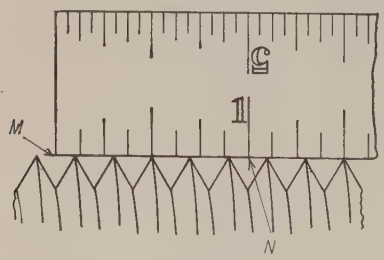

FIG. 12–15

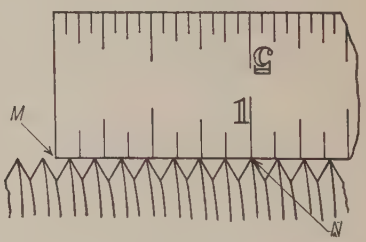

FIG. 12–16

12–6. Threads per Inch. The size of a thread on a screw is commonly specified by stating the number of threads which the screw has in an inch of its length. For example, Fig. 12–15 represents the side of a screw with a scale laid against it so that the line M is over the center

of a groove. The line N, which is an inch from M, comes over the center of another groove or another turn of the same groove and there are five whole thread points between M and N. This screw would be described as a screw having five threads to the inch, no account being taken of its being single or double. In Fig. 12–16 the line M is placed over the center of a space and the line N happens to come over the center of a thread point with seven whole thread points between. There are, therefore, seven and one-half threads per inch on this screw. The number of threads per inch is the reciprocal of the pitch and for a single threaded screw is also the reciprocal of the lead.

12–7. Right-Hand and Left-Hand Threads. If the thread winds around the screw in such a way that it slants downward from right to left as one looks at it, as shown in Fig. 12–17, it is called a *right-hand* thread; if it slants downward from left to right as one looks at it, as shown in Fig. 12–18, it is called a *left-hand* thread. If the screw with the right-hand thread is turned in the direction of the arrow A, Fig. 12–17, it will move downward through the stationary nut, or if the screw

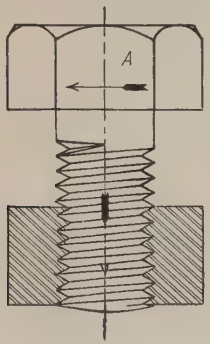

FIG. 12–17

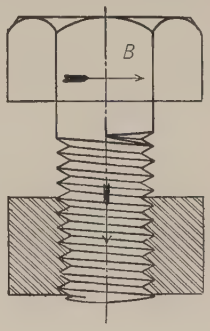

FIG. 12–18

cannot move endwise the nut will be drawn up. The screw with the left-hand thread would have to be turned in the direction of the arrow B (Fig. 12–18), to move downward or to draw the nut up. If one were looking at the end of a right-hand screw and turned it *right handed* or *clockwise*, it would move away from him, whereas a left-hand screw looked at endwise and turned *left handed* or *anti-clockwise* would move away.

12–8. Relation between the Speed of a Screw or Nut and the Speed of a Point on the Wrench or Handle. In Fig. 12–19 suppose that the screw S is supported in a bearing. Collars H and B prevent it from moving endwise. The lead of the screw is P inches. S fits into a nut N which is free to slide along the guides G which also keep it from turning. A crank with a handle K is fast to the end of the screw, the center of K

being at a distance of R inches from the axis of the screw. It is now required to find a method of determining the relation between the linear speed of the handle K and of the nut N. If the crank is given

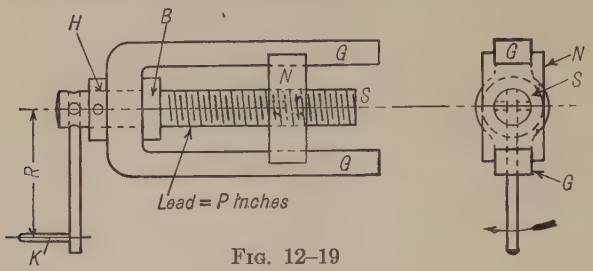

Fig. 12–19

one complete turn it will, of course, turn the screw once and the nut will move along the guides a distance P inches. While the crank turns once the center of K moves over the circumference of a circle whose radius is R, therefore it moves over a distance $2\pi R$ inches. Therefore

$$\frac{\text{Linear speed of } N}{\text{Linear speed of } K} = \frac{P}{2\pi R} \tag{2}$$

Also, since the forces at the two points are inversely as the speeds, neglecting friction,

$$\frac{\text{Force at } N}{\text{Force at } K} = \frac{2\pi R}{P} \tag{3}$$

In Fig. 12–20, which shows an ordinary jack screw, the exact value of the speed ratio differs slightly from that expressed by equation (2). Here the point K at which the force is applied rises with the screw so that in making a complete turn the point K moves over a helix whose diameter is $2R$ and whose lead is equal to that of the screw. The formula for the length of a helix is $\sqrt{2\pi R^2 + P^2}$ so that the actual speed ratio is

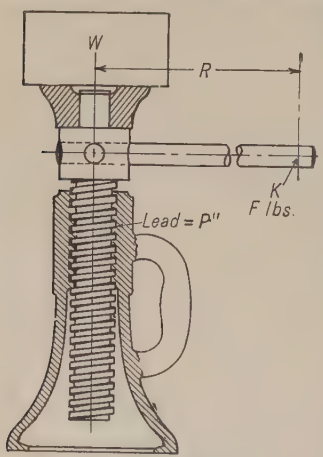

Fig. 12–20

$$\frac{\text{Linear speed of } W}{\text{Linear speed of } K} = \frac{P}{\sqrt{2\pi R^2 + P^2}} \tag{4}$$

The lead (P) is so small relative to R that the value

$$\sqrt{2\pi R^2 + P^2}$$

differs only very slightly from $2\pi R$. Accordingly, although equation (4) is the correct one, equation (2) is usually accurate enough for all practical purposes.

12–9. Compound or Differential Screws. Fig. 12–21 illustrates the style of screw known as a *differential screw*. A part S of the screw itself has a thread whose lead is P inches and fits into a nut T which is a part of the stationary frame. The other end S_1 of the screw has a different thread, of lead P_1 inches which fits the nut N. This nut may slide along the guides G but is held by the guides from turning. As the screw is turned the motion of the nut is the resultant of the movement of the screw S through the nut T and of the nut N along S_1. Suppose, for example, that $P = \frac{1}{2}$ in. and $P_1 = \frac{7}{16}$ in., both being right-hand screws. If now the handle K is turned once right handed, as seen from the left, the whole screw moves along through T toward the right $\frac{1}{2}$ in., and if it were not for the thread S_1N would move to the right $\frac{1}{2}$ in. At the same time, however, S_1 has drawn N back upon itself $\frac{7}{16}$ in. so that the net movement of N toward the right is $\frac{1}{2}$ in. $-$ $\frac{7}{16}$ in. or $\frac{1}{16}$ in. Again, suppose $P = \frac{1}{2}$ in. right hand and $P_1 = \frac{7}{16}$ in. left hand. One turn of the handle in the same direction as before will advance S through T $\frac{1}{2}$ in. and at the same time carry N off S_1 $\frac{7}{16}$ in., so that the net movement of N to the right is $\frac{1}{2} + \frac{7}{16}$ in. or $\frac{15}{16}$ in. A device of the first sort may be used for obtaining a very small movement of the nut for one turn of the screw without the necessity of using a very fine thread.

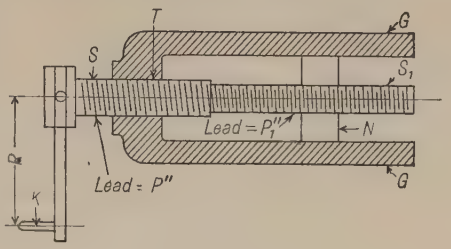

Fig. 12–21

12–10. Examples on Velocity and Power of Screws.

Example 1. In Fig. 12–22 suppose it is required to find the load W, which, suspended from the nut N, can be raised by a force of 60 lb applied at F. The screw has a lead of $\frac{1}{2}$ in. Assume that the friction loss is 40 per cent. Let $R = 20$ in.

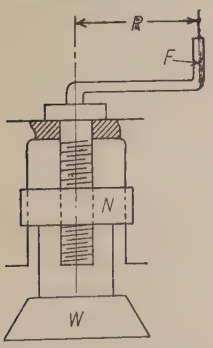

Fig. 12–22

Solution. While the screw makes one turn F moves over a distance $2\pi 20 = 125.66$ in. and N rises $\frac{1}{2}$ in.

Therefore, $F \times 125.66 \text{ in.} = W \times \frac{1}{2} \text{ in.}$

Since 40 per cent is lost in friction the net force is

$$0.60 \times 60 = 36 \text{ lb}$$

Therefore, $36 \times 125.66 = W \times \frac{1}{2}$ in.

or $W = 9047.5$ lb

The same result would be obtained by substituting directly in equation (3).

Example 2. In the jack screw shown in Fig. 12–20, the lead of the screw is $\frac{1}{2}$ in. $R = 3$ ft, 6 in. The force exerted at K is 100 lb. To find the weight W which could be lifted if friction were neglected.

Solution. Equation (4) applies in this case in finding the speed ratio, but equation (2) will be very nearly correct.

$$\frac{\text{Speed of } W}{\text{Speed of } K} = \frac{\frac{1}{2} \text{ in.}}{2\pi 42} = \frac{100}{W}$$

Therefore

$$W = 2\pi 42 \times 100 \times 2 = 52{,}779$$

In any case such as this the loss by friction would be great and would have to be taken account of.

Example 3. In Fig. 12–23 $P_1 = \frac{3}{16}$ in. right hand; $P_2 = \frac{1}{8}$ in. right hand. To find how many turns of the hand wheel are required to lower the slide $\frac{1}{2}$ in., and to determine the direction the wheel must be turned.

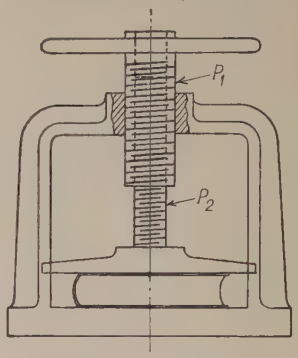

FIG. 12–23

Solution. Since the outer screw is right hand and has a lead of $\frac{3}{16}$ in. one turn of the wheel right handed as seen from above will lower the outer screw $\frac{3}{16}$ in. At the same time, since the inner screw is also right hand, this one turn of the wheel will draw the inner screw into the outer one $\frac{1}{8}$ in. so that the resultant downward motion of the slide for one turn of the wheel is $\frac{3}{16}$ in. $- \frac{1}{8}$ in. $= \frac{1}{16}$ in. Therefore, to lower it $\frac{1}{2}$ in. the wheel must be turned right handed as seen from above as many times as $\frac{1}{16}$ is contained in $\frac{1}{2}$ or 8 times.

12–11. Rotation of Screw or Nut Caused by Axial Pressure. In the cases above considered, the rotating force has been assumed to act on the screw or nut in a plane perpendicular to the axis of the screw. With a screw of large lead and relatively small diameter, so that the angle which the helix makes with the axis of the screw is small, a force acting in the direction of the axis may have a component in the direction to cause rotation which is great enough to overcome the frictional resistance and other resistances to turning and thus cause either the screw or the nut to turn. This principle is made use of in small automatic drills and screwdrivers, in which axial pressure on the handle causes the tool to turn. Such action is not possible unless the helix angle is small, and the rotative component of the force relatively large. It is well known, however, that constant jarring will cause nuts to work loose, hence the necessity for cotter pins or double nuts, one serving as a check for the other.

12–12. Screw Cutting. Screws are correctly cut in a lathe where the cylindrical blank is made to rotate uniformly on its axis, while a tool, having the same contour as the space between the threads, is made to move uniformly on guides in a path parallel to the axis of the screw, an amount equal to the lead for each rotation of the blank. The screw is completed by successive cuts, the tool being advanced nearer the axis for each cut until the proper size is obtained. A nut can be cut in the

same way by using a tool of the proper shape and moving it away from the axis for successive cuts.

Screws are also cut with solid dies either by hand or power, and with proper dies and care good work will result. Nuts are generally threaded by means of " taps " which are made of cylindrical pieces of steel having a screw thread cut upon them of the requisite pitch; grooves or flutes are made parallel to the axis to furnish cutting edges, the tap is tapered off at the end to allow it to enter the nut, and the threads are " backed off " to supply the necessary clearance. Before tapping, the nut must have a plain hole in it of a diameter a little greater than the root diameter of the screw which it is to fit.

Screws cut by open dies that are gradually closed in as the screw is being cut are not accurate, as the screw is begun on the outside of the cylinder by the part of the die which must eventually cut the bottom of the thread on a considerably smaller cylinder. Thus, as the angle of the helix is smaller the smaller the cylinder, the lead remaining the same, the die at first traces a groove having a lead due to the smaller angle of the helix at the bottom of the thread. As the die plates are made to approach each other, they tend to bring back this helical groove to the standard lead; this strains the material of the threads, and finally produces a screw of a different lead than that of the die plates.

12–13. Screw Cutting in a Lathe. In cutting a screw thread in a lathe, the stock on which the thread is being cut turns at a speed such that it will have a surface speed suitable for the cutting tool. While the work is making one turn, the tool must be fed along in a direction parallel to the axis of the work a distance equal to the lead of the thread which is being cut. Figs. 12–24 and 12–25 show one of the simplest methods of accomplishing this result. Fig. 12–24 is the front view of the lathe and Fig. 12–25 the end view. The gears are lettered alike in both views. Many of the modern lathes use a much more elaborate system of gearing, but that shown in the figure serves to illustrate the principles and is easier to understand than the more complicated ones.

In Fig. 12–24, W is the stock on which the thread is to be cut. This is clamped to the face plate by the dog so that both turn together. The face plate is fast to the spindle which is driven from the cone pulley either directly or through the back gears. On the opposite end of the spindle is the gear A driving gear B on the stud K through one or two idle gears M and N according to the desired direction of rotation. Fast to the same stud, and, therefore, turning at the same speed as B, is the gear C. This gear drives D through an idle gear. D is fast to the lead screw which is embraced by a nut inside the carriage. The tool is supported on and moves along with the carriage.

Assume that the lead of the thread to be cut on the blank is $\frac{1}{n}$ part of an inch and that the lead of the thread on the lead screw is $\frac{1}{t}$ part of

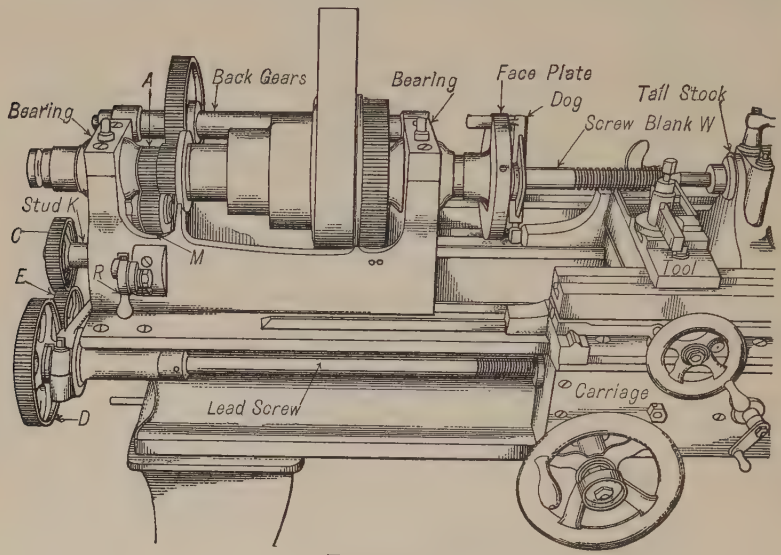

FIG. 12–24

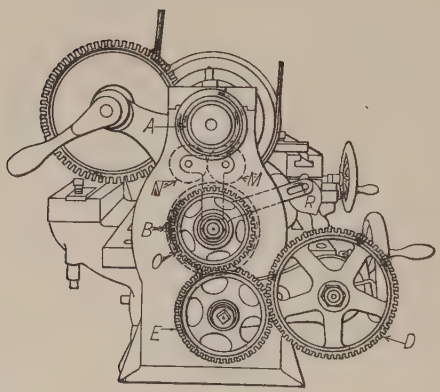

FIG. 12–25

an inch. If the blank makes a turns in a unit of time, then the distance which the tool must move in that time must be $a \times \frac{1}{n}$; also if b represents the number of turns which the lead screw makes in the same unit

of time, $b \times \frac{1}{t}$ must equal the distance the tool moves. Therefore,

$$a \times \frac{1}{n} = b \times \frac{1}{t}$$

Therefore

$$\frac{b}{a} = \frac{\frac{1}{n}}{\frac{1}{t}}$$

or

$$\frac{\textit{Angular speed of lead screw}}{\textit{Angular speed of blank}} = \frac{\textit{Lead of thread which is being cut}}{\textit{Lead of thread on lead screw}} \quad (5)$$

Now from the laws governing wheel trains

$$\frac{\textit{Angular speed of lead screw}}{\textit{Angular speed of blank}} = \frac{\textit{Teeth in } A}{\textit{Teeth in } B} \times \frac{\textit{Teeth in } C}{\textit{Teeth in } D}$$

Therefore,

$$\frac{\textit{Teeth in } A}{\textit{Teeth in } B} \times \frac{\textit{Teeth in } C}{\textit{Teeth in } D} = \frac{\textit{Lead of thread which is being cut}}{\textit{Lead of thread on lead screw}} \quad (6)$$

In any particular lathe the teeth in gears A and B are known quantities and cannot be changed.

The lead of the thread on the lead screw is also known. The gears C and D can be changed to give the desired speed to the lead screw, the idler E being adjusted so as to make proper connection between them. If the thread on the lead screw and that being cut are both right hand or both left hand, the lead screw must turn in the same direction as the blank. If one thread is right hand and the other left hand, the lead screw and the blank must turn in opposite directions. This is adjusted by the idle gears M and N.

Example 4. In Figs. 12–24 and 12–25, assume that the lead of the thread on the lead screw is $\frac{3}{8}$ in. left hand; gear A has 20 teeth; B, 30 teeth; C, 27 teeth, and D, 54 teeth. To find the lead of the thread which is being cut on the blank.

Solution. Substituting in equation (6).

$$\frac{20}{30} \times \frac{27}{54} = \frac{\text{Lead of thread being cut}}{\frac{3}{8}}$$

Solving this equation gives lead of thread which is being cut as $\frac{1}{8}$ in. That is, a screw of 8 threads per inch is being cut.

To determine whether a right-hand or a left-hand thread is being cut the directions may be followed through by putting on arrows. If this were done in the figure,

the arrows would indicate that the blank and the lead screw are turning in the same direction, therefore, since the lead screw has a left-hand thread the thread which is being cut is left hand. If the lever R were thrown up so as to bring both idle gears into use, the direction of the lead screw would be reversed and a right-hand thread would be produced.

Example 5. Referring still to Figs. 12–24 and 12–25, assume that the lead screw and the gears A and B are the same as in Example 4. Let it be required to find the number of teeth in C and D to cut 20 threads per inch on the blank.

Solution. Substituting in equation (6).

$$\frac{20}{30} \times \frac{\text{Teeth in } C}{\text{Teeth in } D} = \frac{\frac{1}{20}}{\frac{3}{8}}$$

Hence

$$\frac{\text{Teeth in } C}{\text{Teeth in } D} = \frac{1}{20} \times \frac{8}{3} \times \frac{30}{20} = \frac{1}{5}$$

Then any practical sized gears may be used at C and D provided D has five times as many teeth as C; as, for example, 100 teeth in D and 20 teeth in C.

12–14. Worm and Wheel. A worm (see § 9–69) may be considered as a screw and the worm wheel as the nut.

One complete turn of a single-threaded worm will advance the wheel one tooth, that is, it will rotate the wheel $\frac{1}{T}$ part of a revolution, where T represents the number of teeth in the wheel. One turn of a double-threaded worm will advance the wheel two teeth or $\frac{2}{T}$ part of a revolution.

Again, if P represents the lead of the worm thread and D the pitch diameter of the worm wheel, one turn of the worm will rotate the wheel $\frac{P}{\pi D}$ part of a revolution. Evidently this relation holds true regardless of whether the worm is single or multiple threaded.

PROBLEMS

XII–1. A standard No. 10 machine screw has 24 threads per inch. If a man with a screwdriver is turning the screw at the rate of 54 turns per minute, how long a time will be required to screw in six such screws, each going $\frac{3}{4}$ in. into its hole, if $\frac{1}{2}$ min is required to insert each screw and place screwdriver in position for starting the work?

XII–2. A $\frac{3}{8}$ in. standard bolt, 16 threads per inch, is to be screwed through a nut $\frac{3}{8}$ in. thick so as to project $\frac{1}{2}$ in. beyond the nut. How many turns must be given to the screw if the nut slips in the direction the screw is turning at the average rate of $\frac{1}{4}$ turn for every turn of the screw?

XII–3. The pulley P makes 40 rpm in the direction shown. What must be the lead of the screw if nut A is to rise $3\frac{3}{4}$ in. in 45 seconds? Is screw right handed or left handed?

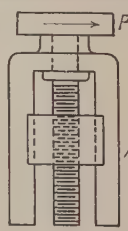

Prob. XII–3

XII–4. What pressure in pounds on the square inch is exerted on a liquid below the piston by a force of 40 lb at the rim of the hand wheel? The screw has $\frac{1}{4}$-in. lead and is double threaded. Allow 20 per cent lost in friction.

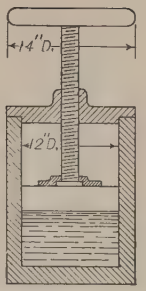

PROB. XII–4

XII–5. Find lead in inches of the screw if a force of $1\frac{3}{4}$ tons is to be exerted at W by a pull of 75 lb on the rope in the groove of the wheel D which has an effective diameter of $4\frac{1}{2}$ ft. Allow 45 per cent friction loss.

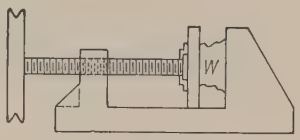

PROB. XII–5

XII–6. If driving pulley, D, makes 300 rpm at what rate is the cross rail raised?

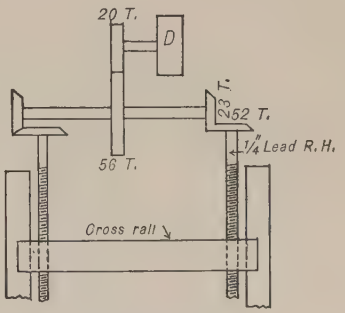

PROB. XII–6

XII–7. In this micrometer caliper the graduations at B are $\frac{25}{1000}$ in. apart. The circumference at C is divided into 25 equal parts. The screw S is single right hand threaded with 40 threads per inch. When the end of the sleeve C is at the 0 line of B, and the 0 line on C coincides with the line M, the points P and P_1 just touch. How far apart are they as shown? Give answer to nearest $\frac{1}{1000}$ in.

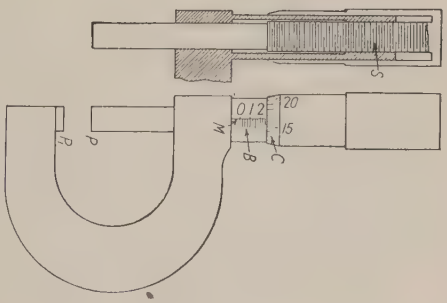

PROB. XII–7

XII–8. The threaded rod is stationary. The thread at S has $\frac{1}{11}$ in. lead, and S_1 $\frac{1}{10}$ in. lead, both right hand. The nuts M and N turn at the same angular speed in the same direction. How many turns must they make in order that the distance A may decrease 1 in.?

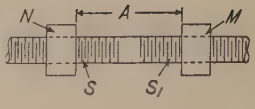

PROB. XII–8

XII–9. B and C are two equal gears. They may have no axial motion. D and E are two gears, E being four times as large as D. Shaft A is a square shaft turning with B, but free to slide through it. The screw threaded through C has a lead of $\frac{1}{4}$ in. left handed. How many turns of the handle are needed and which way (front side of D going down or up) to move the screw 2 in. to the right?

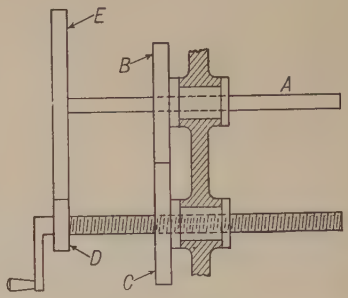

PROB. XII–9

XII–10. Twenty turns of F are to raise W $5\frac{1}{2}$ in. $P_1 = 0.5$ in. lead R. H. P_2 is right handed. What is the lead of P_2? Which way must F turn as seen from above (right handed or left handed)? (Two possible solutions.)

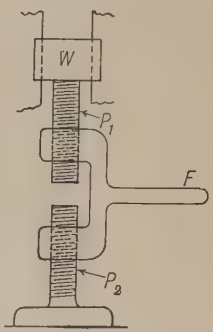

PROB. XII–10

XII–11. Screw S has 10 threads per inch (single) right handed and is fixed. Nut A may slide but cannot turn. How many (single) threads per inch has screw S_1 if 46 turns of the hand-wheel in the direction shown lower A 0.66 in.? Are threads on S_1 right handed or left handed? If the hand wheel had a rim-radius of 7 in. and S_1 had 8 threads per inch (single) right handed, what force would be necessary at the rim to raise a weight (W) of 16,800 lb? Allow 60 per cent lost in friction.

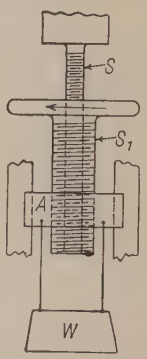

PROB. XII–11

XII–12. The hub H of the 200-tooth gear forms the nut for the screw S. The graduated wheel is fast to the shaft with the two pinions. How far will S move along its axis when W is turned through the angle represented by one division? In which direction will S move if W turns with the arrow?

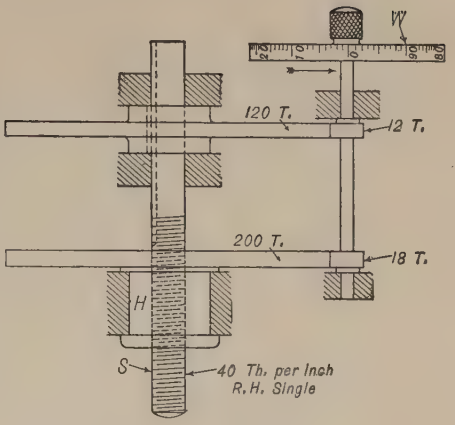

PROB. XII–12

XII–13. If the mechanism of Prob. XII–12 were changed as shown in this figure, how far would S move and in which direction if W turns with the arrow, one division?

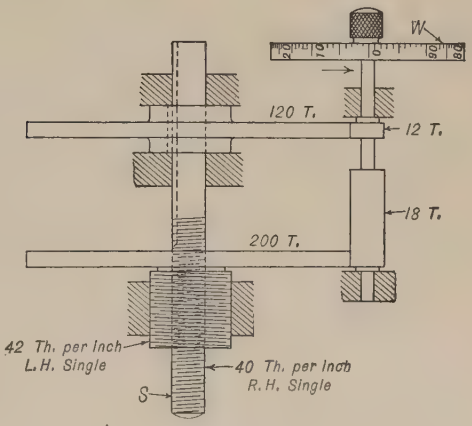

PROB. XII–13

XII–14. In this differential screw, A and C are broad-faced pinions which are fast to each other and are turned by the crank shown. H is a fixed nut, E is a left-hand screw having $\frac{1}{8}$ in. lead and F is a right-hand screw having $\frac{3}{4}$ in. lead. How far does E move for 24 turns of the crank, and in which direction if the crank turns right handed as seen from the left?

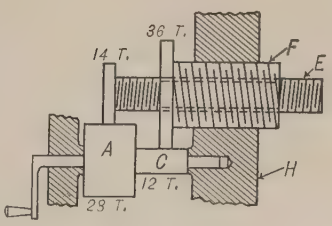

PROB. XII–14

XII–15. In a screw-cutting train (Figs. 12–24, 12–25), the lead screw has a lead of $\frac{1}{6}$ in. left handed. Gear A has 30 teeth; gear B has 40 teeth. Find suitable numbers of teeth for the change gears C and D, using no gear of less than 16 teeth, if the lathe is to cut threads from 4 to 20 per inch, also to cut $11\frac{1}{2}$ threads per inch. Arrange results in the form of a table, using the least number of gears and having as few teeth as possible. Give the number of different change gears that must be furnished with the lathe and also the total number of teeth that must be cut to make the set of change gears. Should N and M both be used in cutting a right-hand thread, or only M?

XII–16. In a worm and wheel let the worm be triple-threaded and the diameter of the drum be 14 in. How many teeth must the wheel have if 30 turns of the worm are to move W 20 in.? If $R = 16\frac{2}{3}$ in., what must F be, if W equals 8800 lb actually lifted, 40 per cent being the loss due to friction? If the handle is " pushed " to raise the weight, is the worm right handed or left handed? (Take $\pi = \frac{22}{7}$.)

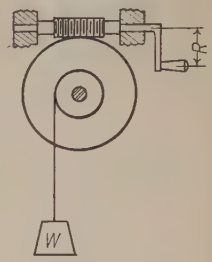

PROB. XII–16

XII–17. Worm A is double-threaded and its worm wheel has 36 teeth. Worm B has a lead of $\frac{5}{8}$ in. The pitch diameter of the drum for the weight is 1 ft. The force, F, at the end of a 16-in. handle on B is 20 lb, and W is 25,344 lb. If 60 per cent is lost in friction, what is the diameter of worm wheel C? (Take $\pi = \frac{22}{7}$.)

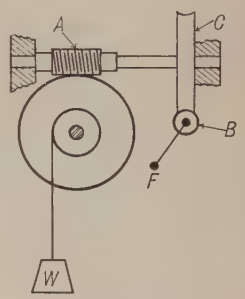

PROB. XII–17

XII–18. F is a double-threaded right-handed worm. A is a worm wheel having 32 teeth. On the same shaft with A is a gear C, 17-in. pitch diameter in mesh with gear D, 4-in. pitch diameter. On the shaft with D is the left-handed worm E having a lead of 2 in., in mesh with worm wheel B, 10.83 in. pitch diam. Disk H is fast to the shaft of worm F, and B is loose on this shaft.

1. How many turns of handle before H and B will be in the same position relative to one another?

2. What changes in these results would occur if worm E were right handed instead of left handed?

3. If a drum 20 in. in diameter were attached to B and a weight of 2000 lb. suspended from it, how large a force at the handle would be necessary to raise the weight? Neglect friction.

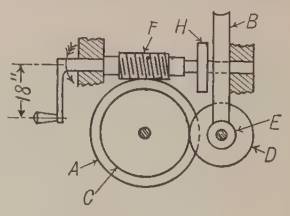

PROB. XII–18

XII–19. *P* is threaded through the worm wheel but cannot turn. Lead of thread on *P* is $\frac{1}{8}$ in. right handed. Worm is double-threaded and right handed. How many turns of *B*, and which way (right handed or left handed) to raise weight $\frac{1}{2}$ in.? What weight can be raised by a force of 50 lb applied at *F* (30 per cent friction loss)?

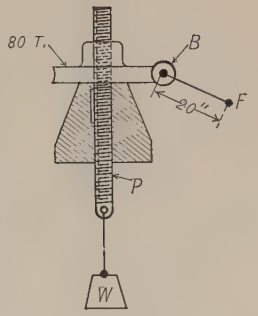

PROB. XII–19

CHAPTER XIII

BELTS, ROPES, AND CHAINS

13–1. Flexible Connectors. If the wheel A, Fig. 13–1, is turning at a certain angular speed about the axis S, its outer surface will have a linear speed dependent upon the angular speed and the diameter of A.

If a flexible band is stretched over A, connecting it with another wheel B and there is sufficient friction between the band and the surfaces of the wheels to prevent appreciable slipping, then the band will move with a linear speed approximately equal to the surface speed of A, and will impart approximately the same linear speed to the surface of B, thus causing B to turn. The wheels may be on axes which are parallel, intersecting, or neither parallel nor intersecting. Flexible connectors may be divided into three general classes:

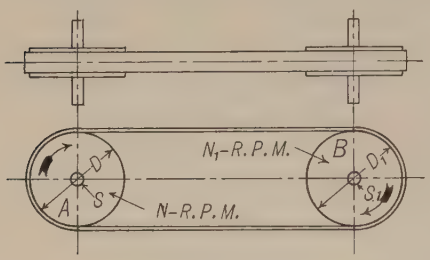

Fig. 13–1

1. **Belts** made of leather, rubber, or woven fabrics are flat and thin, and require pulleys nearly cylindrical with smooth surfaces. Flat ropes may be classed as belts. Belts are also made with V-shaped cross section to be used on grooved pulleys.

2. **Cords** made of catgut, leather, hemp, cotton, or wire are nearly circular in section and require either grooved pulleys or drums with flanges. Rope gearing, either by cotton or wire ropes, may be placed under this head.

3. **Chains** are composed of links or bars, usually metallic, jointed together, and require wheels or drums either grooved, notched, or toothed, so as to fit the links of the chain.

For convenience the word **band** may be used as a general term to denote all kinds of flexible connectors.

Bands for communicating continuous motion are endless.

Bands for communicating reciprocating motion are usually made fast at their ends to the pulleys or drums which they connect.

13–2. Pitch Surface and Line of Connection. Figure 13–2 represents the edge view of a piece of a belt before being wrapped around the pulley. If it is assumed that there are no irregularities in the make-up of the

belt the upper surface o is parallel to and equal in length to the surface i. When this same belt is stretched around a pulley, as in Fig. 13–3, the surface i is drawn firmly against the surface of the pulley while the surface o bends over a circle whose radius is greater than that of the surface of the pulley by an amount equal to the belt thickness 2ρ. The outer part of the belt must therefore stretch somewhat and the inner part compress. There will be some section between i and o which is neither stretched nor compressed, and the name *neutral section* may be given to this part of the belt. In a flat belt the neutral section may be assumed to be halfway between the outer and inner surfaces. An imaginary cylindrical surface around the pulley, to which the neutral section of the belt is tangent, is the **pitch surface** of the pulley, the radius of this being the **effective radius** of the pulley. A line in the neutral section of the belt at the center of its width is the line of connection between two pulleys and is tangent to the pitch surfaces, and coincides with a line in each pitch surface known as the **pitch line.**

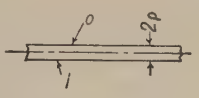

Fig. 13–2

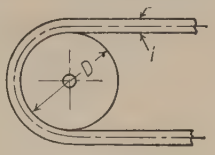

Fig. 13–3

13–3. Speed Ratio and Directional Relation of Shafts Connected by a Belt. In Fig. 13–1 let the diameter of the pulley A be D in., the diameter of B be D_1 in., and the half thickness of belt $= \rho$. Also let N represent the rpm of S, and N_1 = rpm of S_1.

Then, from equation (6) on page 18

$$\text{Linear speed of pitch surface of } A = \pi N\,(D + 2\rho)$$

and $$\text{Linear speed of pitch surface of } B = \pi N_1\,(D_1 + 2\rho)$$

If the belt speed is supposed to be equal to the speed of the pitch surfaces of the pulleys

$$\pi N\,(D + 2\rho) = \pi N_1\,(D_1 + 2\rho)$$

or

$$\frac{N}{N_1} = \frac{D_1 + 2\rho}{D + 2\rho} \tag{1}$$

That is, the angular speeds of the shafts are in the inverse ratio of the effective diameters of the pulleys, and this ratio is constant for circular pulleys.

As the thickness of belts generally is small as compared with the diameters of the pulleys, it may be neglected.

The speed ratio will then become

$$\frac{N}{N_1} = \frac{D_1}{D} \tag{2}$$

which is the equation almost always used in practical calculations.

Example 1. Assume that a shaft A makes 360 rpm. On A is a pulley 24 in. in diameter belted to a pulley 36 in. in diameter on another shaft B. To find speed of shaft B.

From equation (2)

$$\frac{\text{Speed of } A}{\text{Speed of } B} = \frac{\text{Diameter of pulley on } B}{\text{Diameter of pulley on } A}$$

Substituting the known values, this equation becomes

$$\frac{360}{\text{Speed of } B} = \frac{36}{24}$$

Therefore, $$\text{Speed of } B = \frac{24}{36} \times 360 = 240 \text{ rpm}$$

Example 2. Suppose that a shaft A making 210 rpm is driven by a belt from a 30-in. pulley on another shaft B which makes 140 rpm; to find the size of the pulley on A.

Using the principle of equation (2)

$$\frac{\text{Speed of } A}{\text{Speed of } B} = \frac{\text{Diameter of pulley on } B}{\text{Diameter of pulley on } A}$$

Therefore, $$\frac{210}{140} = \frac{30}{x} \quad \text{or} \quad x = \frac{30 \times 140}{210} = 20 \text{ in.}$$

Then a 20-in. pulley is required on A.

The relative directions in which the pulleys turn depend upon the manner in which the belt is put on the pulleys. The belt shown in Fig. 13–1 is known as an **open belt** and the pulleys turn in the same direction as suggested by the arrows. The belt shown in Fig. 13–4 is known as a **crossed belt** and the pulleys turn in opposite directions as indicated.

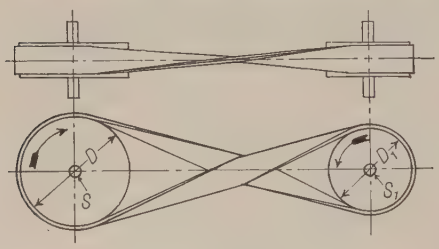

Fig. 13–4

13–4. Kinds of Belts. The material most commonly used for flat belts is leather. For some kinds of work, however, belts woven from cotton or similar material are used. When the belt is to be run in a place where there is much moisture, it may be made largely of rubber properly combined with fibrous material in order to give strength.

Leather belts are made by gluing or riveting together strips of leather cut lengthwise of the hide, near the animal's back. If single thick-

nesses of the leather are fastened end to end, the belt is known as a **single belt** and it is usually about $\frac{3}{16}$ in. thick. If two thicknesses of leather are glued together, flesh side to flesh side, the belt is known as a **double belt** and is from $\frac{5}{16}$ to $\frac{3}{8}$ in. thick. The manner of uniting the ends of the strips to form a belt, and of fastening together the ends of the belt to make a continuous band for running over pulleys, is very important. A detailed discussion of these features is not necessary, however, in the present study of the subject.

Leather belts always should be run with the hair side against the pulleys, if possible.

13–5. Power of Belting. The amount of power which a given belt can transmit depends upon its speed, its strength, and its ability to adhere to the surface of the pulleys. The speed is usually assumed to be the same as the surface speed of the pulleys. The strength, of course, depends upon the width and thickness and upon the nature of the material of which the belt is made. The ability to cling to the pulley so as to run with little or no slipping depends upon the condition of the pulley surfaces and of the surface of the belt which is in contact with the pulleys, and upon the tightness with which the belt is stretched over the pulleys. Since leather belts are more common and more nearly uniform in their character than those of other materials, the discussion of power will be confined to them.

13–6. Unit of Power — Horsepower. In order to measure the power, or the amount of work done, by any force, it is necessary to have some standard of measurement. A common unit for measuring work done is that known as the foot-pound. A **foot-pound** is the amount of work done in raising a 1-lb weight a distance of 1 ft, or in moving any number of pounds through such a distance that the product of the force exerted multiplied by the distance moved is equal to 1. For example, if a 12-lb weight is lifted $\frac{1}{12}$ ft, the work done is 12 lb $\times$ $\frac{1}{12}$ ft = 1 ft-lb. If the apparatus furnishing the force to raise this weight is such that it can raise it in 1 min, the apparatus is said to be capable of doing 1 ft-lb of work per minute, or to have a power of 1 ft-lb per min.

For measuring large quantities of power a larger unit is used, known as a horsepower. One **horsepower** is equal to 33,000 ft-lb of work per minute. For example, an engine which is capable of doing 1 hp work is one which can move 1 lb through a distance of 33,000 ft per min, or 33,000 lb 1 ft per min, or any number of pounds through such a distance in a minute that the product of the force multiplied by the distance moved in a minute is 33,000.

13–7. Tension in a Belt. In Fig. 13–5 suppose the pulley A is fast to the shaft S and the pulley B fast to the shaft S_1. Let it be assumed

that when the shafts are at rest a belt is stretched over the pulleys as shown, the tightness with which it is stretched being such that there is a tension or pull in the belt of a definite number of pounds. This tension is practically the same at all places in the belt and is called the *initial tension*. Let this initial tension be represented by the letter T_0. Suppose now that some external force is applied to the shaft S causing it to tend to turn in the direction indicated by the arrow. This tendency to turn will increase the tension in the lower part of the belt (say between m and n) and decrease the tension in the upper part. Let the new tension in the lower or tight side of the belt be represented by T_1 (which is greater than T_0) and the tension in the upper or slack side by T_2 (which is less than T_0).

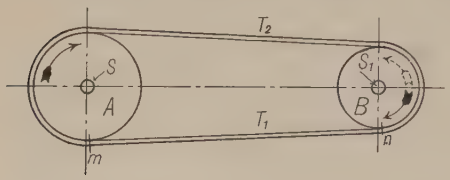

FIG. 13–5

If the belt sticks to the pulley B so that there is no slipping, the force T_1 tends to cause the pulley B to turn as shown by the full arrow and the force T_2 tends to cause B to turn as shown by the dotted arrow. As soon as T_1 becomes enough greater than T_2 to overcome whatever resistance the shaft S_1 offers to turning, the pulleys will begin to turn in the direction of the full arrow. The unbalanced force, then, which makes the driven pulley B turn is the difference between the tension T_1 on the tight side of the belt and the tension T_2 on the slack side of the belt. This difference in tensions is called the **effective pull** of the belt and is here represented by the letter E.

From the above discussion it may be seen that the following equation holds true:

$$T_1 - T_2 = E \tag{3}$$

13–8. To Find the Horsepower of a Belt. Since, as explained in the previous paragraph, the effective pull is the force in the belt which enables it to do work, it follows that the product of the effective pull by the speed of the belt in feet per minute will give the foot-pounds of work per minute that the belt performs, and this divided by 33,000 will give the horsepower which the belt transmits. If N is the rpm of S, and D the diameter of pulley A (in feet), the following equation expresses the horsepower of the belt.

$$\frac{\textit{Belt speed in feet per minute} \times E}{33{,}000} = \text{hp} \tag{4}$$

or

$$\frac{\pi DN\ (T_1 - T_2)}{33{,}000} = \text{hp} \tag{5}$$

It is evident from the above that for a given belt speed the greater the difference between T_1 and T_2 the more horsepower the belt transmits. Any figures which may be given for the maximum allowable stress in a belt and the maximum ratio $\frac{T_1}{T_2}$ are necessarily approximate and somewhat a matter of opinion. For the purpose of illustrating the method of calculating the power which a given belt might be expected to transmit it will be assumed that $\frac{T_1}{T_2}$ may not exceed $\frac{7}{3}$ and that the maximum allowable tension per inch of width is 140 lb for a double leather belt and 75 lb for a single belt. If it is still further assumed that stresses due to centrifugal force may be neglected,

$$\frac{T_1}{T_2} = \frac{7}{3} \quad \text{and} \quad T_1 = 140 \text{ lb per in. of width}$$

whence

$$T_1 - T_2 = 80 \text{ lb}$$
$$= \text{maximum effective pull per inch of width of double belt}$$

Also $$\frac{T_1}{T_2} = \frac{7}{3} \quad \text{and} \quad T_1 = 75$$

whence

$$T_1 - T_2 = 43 \text{ lb (nearly)}$$
$$= \text{maximum effective pull per inch of width of single belt}$$

Substituting these values in equation (4)

$$\frac{\textit{Belt speed in feet per minute} \times 80 \times \textit{width of belt in inches}}{33{,}000} = \textit{horsepower a double belt will transmit} \quad (6)$$

$$\frac{\textit{Belt speed in feet per minute} \times 43 \times \textit{width of belt in inches}}{33{,}000} = \textit{horsepower a single belt will transmit.} \quad (7)$$

Corrections must be made in equations (6) and (7) if the belt speed is such that centrifugal force must be taken into account. It must also be borne in mind that the values 80 and 43 are subject to modification.

Example 3. A shaft carrying a 48-in. pulley runs at a speed of 180 rpm. An 8-in. double belt runs over the pulley and drives another shaft. To find the power that the belt can be expected to transmit without excessive strain.

Solution. Using formula (6)

$$\text{Belt speed in feet} = \frac{\pi\, 48}{12} \times 180 = 2262 \text{ ft per min}$$

Then
$$\frac{2262 \times 80 \times 8}{33{,}000} = 43\tfrac{1}{2} \text{ hp (nearly)}$$

Any such solution for a belt must be considered approximate, merely furnishing a means of estimating the horsepower roughly. There is no doubt that the above belt, if in proper condition, would carry much more than even the $43\frac{1}{2}$ hp, but the more heavily the belt is loaded the more attention it will require and the shorter will be its life. In the case of a belt running at relatively high speed the stress in the belt due to centrifugal force will cut down the effective pull which might otherwise be expected from the belt, thus reducing the horsepower from a given belt. Therefore, in calculating the horsepower for such a belt, allowance must be made for the centrifugal force.

Example 4. A shaft running 200 rpm is driven by a single belt on a 24-in. pulley; 15 hp is required. To find a suitable width of belt to use.

Solution. Using formula (7)

$$\text{Belt speed} = \frac{\pi\, 24}{12} \times 200 = 1257 \text{ ft per min}$$

Then,
$$\frac{1257 \times 43 \times \text{width}}{33{,}000} = 15$$

$$\text{Width} = \frac{15 \times 33{,}000}{1257 \times 43} = 9 \text{ in. (nearly)}$$

13–9. Approximate Formula for Calculating the Length of Belts. In finding the length of belt required for a known pair of pulleys at a known distance apart, the most satisfactory method, when possible, is to stretch a steel tape over the actual pulleys after they are in position, making a reasonable allowance (about 1 in. in every 10 ft) for stretch of the belt. Often, however, it is necessary to find the belt length from the drawings before the pulleys are in place or when, for some other reason, it is not convenient actually to measure the length. Various formulas have been devised by which the length may be calculated when the pulley diameters and distance between centers of the shafts are known. These formulas, if exact, are all more or less complex and are, of course, different for crossed and for open belts. If the distance between shafts is large, the following will give an approximate value for the length of the belt. Referring to Fig. 13–7 and letting L represent the length of the belt,

$$L = \frac{\pi\,(D + d)}{2} + 2\,C \tag{8}$$

D, d, and C must be expressed in like linear units; if in feet, the resulting value of L will be in feet; if in inches, the value of L will be in inches.

With an open belt where the two pulleys are of the same diameter the above formula gives an exact answer. If the pulleys are not of the same diameter, the length of belt obtained by equation (8) will be less than the correct length. If the shafts are several feet apart and the difference in diameters of the pulleys is not great, the percentage error is very small for an open belt. With a crossed belt the result from the use of equation (8) is considerably less than the real length.

13–10. Exact Formulas for Length of Belt Connecting Parallel Axes. The methods given in the preceding paragraph are sufficient for the conditions there referred to, but it is necessary in designing certain pulleys, known as stepped pulleys and cone pulleys, to make use of an equation expressing exactly, or very nearly so, the belt length in terms of the diameters and the distance between centers of the pulleys. The crossed belt and the open belt must be considered separately.

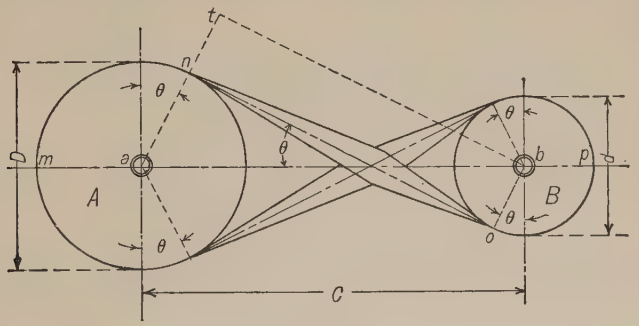

Fig. 13–6

Crossed Belts. Let D and d (Fig. 13–6) be the diameters of the connected pulleys; C the distance between their axes; L the length of the belt (angle θ expressed in radians).

Then
$$L = 2\,(mn + no + op)$$
$$= \left(\frac{\pi}{2} + \theta\right) D + 2\,C\cos\theta + \left(\frac{\pi}{2} + \theta\right) d$$
$$= \left(\frac{\pi}{2} + \theta\right)(D + d) + 2\,C\cos\theta \qquad (9)$$

where
$$\sin\theta = \frac{at}{ab} = \frac{an + bo}{ab} = \frac{D + d}{2\,C}$$

Open Belts. Using the same notation as for crossed belts, we have (Fig. 13–7)

$$L = 2\,(mn + no + op)$$

$$= \left(\frac{\pi}{2} + \theta\right) D + 2\,C\cos\theta + \left(\frac{\pi}{2} - \theta\right) d$$

$$= \frac{\pi}{2}\,(D + d) + \theta\,(D - d) + 2\,C\cos\theta \qquad (10)$$

where $$\sin\theta = \frac{an - bo}{C} = \frac{D - d}{2\,C}$$

and $$\cos\theta = \sqrt{1 - \frac{(D - d)^2}{4\,C^2}}$$

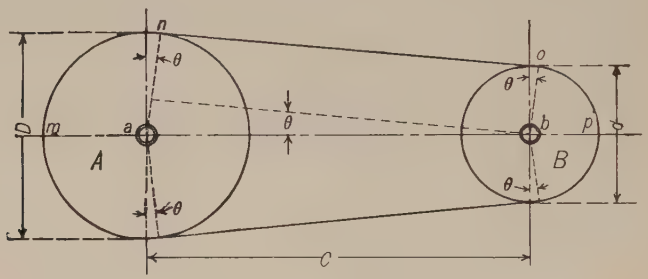

Fig. 13–7

For an open belt, θ is generally small, so that $\theta = \sin\theta$, very nearly; then

$$L = \frac{\pi}{2}\,(D + d) + \frac{(D - d)^2}{2\,C} + 2\,C\sqrt{1 - \frac{(D - d)^2}{4\,C^2}} \text{ (nearly)}$$

$$= \frac{\pi}{2}\,(D + d) + 2\,C\left\{\frac{(D - d)^2}{4\,C^2} + \sqrt{1 - \frac{(D - d)^2}{4\,C^2}}\right\} \text{ (nearly)}$$

If the quantity under the radical sign is expanded, and all terms having a higher power of C than the square in the denominator are neglected, since C is always large compared with $(D - d)$,

$$L = \frac{\pi}{2}\,(D + d) + 2\,C\left\{\frac{(D - d)^2}{4\,C^2} + 1 - \frac{(D - d)^2}{8\,C^2} \cdots\right\}$$

or $$L = \frac{\pi}{2}\,(D + d) + 2\,C + \frac{(D - d)^2}{4\,C} \text{ (very nearly)} \qquad (11)$$

13–11. Stepped Pulleys. Sometimes it is necessary to have such a belt connection between two shafts that the speed of the driven shaft

may be changed readily while the speed of the driving shaft remains constant. One means of accomplishing this is a pair of pulleys each of which has several diameters as shown in Fig. 13–8. Such pulleys are known as stepped pulleys. Suppose that the shaft S, Fig. 13–8, is the driver, making N rpm. When the belt is in the position shown in full lines, the working diameter of pulley A is D_1 and the working diameter of pulley B is d_1. Then if n_1 represents the rpm of S_1, when the belt is in this place,

$$\frac{n_1}{N} = \frac{D_1}{d_1}$$

If the belt is shifted to any other position, as that shown by dotted lines, D_x becomes the working diameter of the driving pulley and d_x of the driven pulley. If n_x represents the speed of S_1 for this belt position

$$\frac{n_x}{N} = \frac{D_x}{d_x}$$

Therefore, by properly proportioning the diameters of the different pairs of steps, it is possible to get any desired series of speeds for the driven shaft.

In designing such a pair of pulleys two things must be taken into account. *First*, the ratio of the diameters of the successive pairs of steps must be such as to give the desired speed ratios. *Second*, the sum of the diameters of any pair of steps must be such as to maintain the proper tightness of the belt for all positions. This second consideration makes the problem of design considerably more complicated.

Two cases arise: *First*, the design of the pulleys for a crossed belt, and *second*, the design for an open belt.

13–12. Stepped Pulleys for Crossed Belt. Assuming that the values of D_1, N, n_1, n_x, and C are known for the drive shown in Fig. 13–8 and assuming that the belt is crossed, instead of open as there shown, let it be required to find a method for calculating D_x and d_x.

First find d_1, which is readily done from the equation

$$\frac{n_1}{N} = \frac{D_1}{d_1}$$

in which d_1 is the only unknown quantity. D_1 and d_1 being known, then, the value of $D_1 + d_1$ is known.

From equation (9) the length of the belt to go over the steps D_1 and d_1 is

$$\left(\frac{\pi}{2} + \theta_1\right)(D_1 + d_1) + 2\,C\cos\theta_1$$

When the belt is on the steps whose diameters are D_x and d_x the equation for the length of the belt is

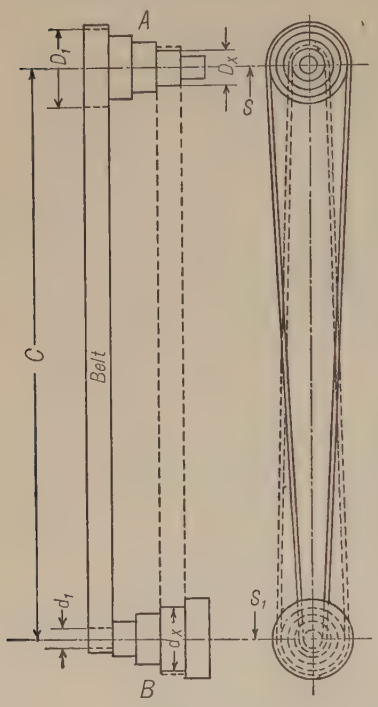

Fig. 13–8

$$\left(\frac{\pi}{2}+\theta_x\right)(D_x+d_x)+2\,C\cos\theta_x$$

Since the same belt is to be used on both pairs of steps the value of these two equations must be the same.

Therefore

$$\left(\frac{\pi}{2}+\theta_1\right)(D_1+d_1)+2\,C\cos\theta_1=\left(\frac{\pi}{2}+\theta_x\right)(D_x+d_x)+2\,C\cos\theta_x$$

Since C is a constant and θ is dependent upon C and $D+d$ it follows that the above equation will be satisfied if

$$D_x+d_x=D_1+d_1 \qquad (12)$$

Therefore in designing a pair of stepped pulleys for a crossed belt the sum of the diameters of all pairs of steps must be the same.

Then from the equation

$$\frac{n_x}{N}=\frac{D_x}{d_x}$$

and equation (12) $\quad D_x+d_x=D_1+d_1$

D_x and d_x may be found by the method of simultaneous equations.

Example 5. To find the diameters of all the steps in the pulleys shown in Fig. 13–9 if a crossed belt is to be used. First, find d_1 from the equation

$$\frac{n_1}{N}=\frac{D_1}{d_1}$$

or $$\frac{192}{120}=\frac{16}{d_1}$$

whence $$d_1=\frac{16\times 120}{192}=10 \text{ in.}$$

Therefore $$D_1+d_1=16+10=26 \text{ in.}$$

From equation (12)

$$D_2+d_2=D_1+d_1=26 \text{ in.}$$

and $$\frac{D_2}{d_2}=\frac{160}{120}$$

or $$D_2=\tfrac{4}{3}\,d_2$$

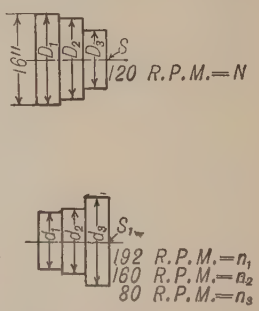

Fig. 13–9

Substituting this value of D_2 in the preceding equation,

$$\tfrac{4}{3}\, d_2 + d_2 = 26$$

or $$\tfrac{7}{3}\, d_2 = 26$$

whence $$d_2 = \frac{26 \times 3}{7} = 11\tfrac{1}{7} \text{ in.} = 11.14 \text{ in.}$$

and $$D_2 = 26 - 11\tfrac{1}{7} = 14\tfrac{6}{7} \text{ in.} = 14.86 \text{ in.}$$

Again $$D_3 + d_3 = 26 \text{ in.}$$

and $$\frac{D_3}{d_3} = \frac{80}{120}$$

or $$D_3 = \tfrac{2}{3}\, d_3$$

$$\therefore \tfrac{2}{3}\, d_3 + d_3 = 26$$

or $$\tfrac{5}{3}\, d_3 = 26 \text{ in.}$$

whence $$d_3 = 15\tfrac{3}{5} \text{ in.} = 15.6 \text{ in.}$$

and $$D_3 = 26 - 15\tfrac{3}{5} = 10\tfrac{2}{5} \text{ in.} = 10.4 \text{ in.}$$

13–13. Stepped Pulleys for Open Belt. Referring again to Fig. 13–8, if the belt is open its length when on the steps D_1 and d_1 is, from equation (11),

$$L = \frac{\pi}{2}(D_1 + d_1) + 2C + \frac{(D_1 - d_1)^2}{4C}$$

and when on steps D_x and d_x

$$L = \frac{\pi}{2}(D_x + d_x) + 2C + \frac{(D_x - d_x)^2}{4C}$$

Equating these two expressions gives

$$\frac{\pi}{2}(D_1 + d_1) + \frac{(D_1 - d_1)^2}{4C} = \frac{\pi}{2}(D_x + d_x) + \frac{(D_x - d_x)^2}{4C} \qquad (13)$$

This may be solved simultaneously with $\dfrac{n_x}{N} = \dfrac{D_x}{d_x}$ to get the values of D_x and d_x.*

If the shafts are several feet apart and the range of speeds for the driven shaft is not excessive, the diameters calculated for an open belt differ only very slightly from those for a crossed belt, and stepped

* Equation (13) may be written in the form

$$D_x + d_x = D_1 + d_1 + \frac{(D_1 - d_1)^2 - (D_x - d_x)^2}{2\pi C}$$

This may be solved approximately, in connection with $\dfrac{n_x}{N} = \dfrac{D_x}{d_x}$, by substituting for $(D_x - d_x)^2$ the value which it would have if the belt were crossed.

pulleys designed for a crossed belt are often used for an open belt. If the shafts are close together and the speed range is large, the crossed belt pulleys cannot be used for an open belt.

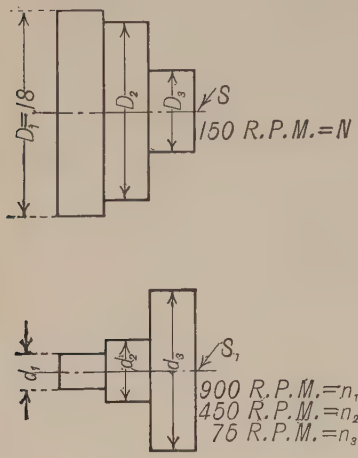

FIG. 13–10

Example 6. To find the diameters of all the steps in the pulleys shown in Fig. 13–10 if an open belt is to be used. Shafts 24 in. on centers.

First find d_1 from the equation

$$\frac{n_1}{N} = \frac{D_1}{d_1}$$

or

$$\frac{900}{150} = \frac{18}{d_1}$$

whence

$$d_1 = \frac{150 \times 18}{900} = 3 \text{ in.}$$

To find D_2 and d_2 substitute in equation (13) the values of D_1, d_1, and C, whence

$$\frac{\pi}{2}(18 + 3) + \frac{(18 - 3)^2}{4 \times 24} = \frac{\pi}{2}(D_2 + d_2) + \frac{(D_2 - d_2)^2}{4 \times 24}$$

and

$$\frac{n_2}{N} = \frac{D_2}{d_2}, \quad \text{whence} \quad \frac{450}{150} = \frac{D_2}{d_2} \quad \text{or} \quad D_2 = 3\,d_2$$

Substituting this value for D_2 and solving,

$$d_2 = 5.43 \text{ in.} \quad D_2 = 16.29 \text{ in.}$$

Similarly,

$$\frac{\pi}{2}(18 + 3) + \frac{(18 - 3)^2}{4 \times 24} = \frac{\pi}{2}(D_3 + d_3) + \frac{(D_3 - d_3)^2}{4 \times 24}$$

and

$$\frac{n_3}{N} = \frac{D_3}{d_3}, \quad \text{whence} \quad \frac{75}{150} = \frac{D_3}{d_3} \quad \text{or} \quad d_3 = 2\,D_3$$

Substituting and solving,

$$D_3 = 7.38 \text{ in.} \quad \text{and} \quad d_3 = 14.76 \text{ in.}$$

The proportion chosen in the data for Example 6 gives an extreme case, and it will be noticed that the amount that $D_2 + d_2$ varies from $D_1 + d_1$ is about $\frac{3}{4}$ in. and the variation of $D_3 + d_3$ is a trifle less than $1\frac{3}{16}$ in. These quantities are large enough to affect the tightness of the belt and must, therefore, be taken into account. In ordinary cases, however, where the distance between centers is much larger than in Example 6 and where the speed ratios are not so great the value of $D_x + d_x$, as obtained from equation (13) by the method just illustrated, differs but very little from $D_1 + d_1$, and this difference can usually be neglected.

13–14. Equal Stepped Pulleys. It is common practise, when convenient, to design a pair of stepped pulleys in such a way that both pulleys have the same dimensions and can, therefore, be cast from the

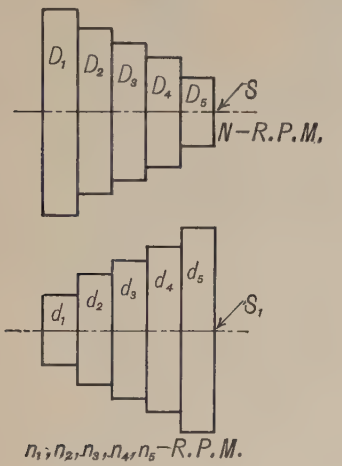

Fig. 13–11

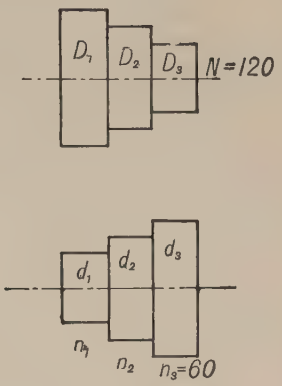

Fig. 13–12

same pattern. This condition imposes certain restrictions on the speed ratios as may be seen from the following:

Referring to Fig. 13-11, if the pulleys are alike

$$D_1 = d_5,\ D_2 = d_4,\ D_3 = d_3,\ D_4 = d_2,\ D_5 = d_1$$

As in previous discussions, $\dfrac{n_1}{N} = \dfrac{D_1}{d_1}$

and $\dfrac{n_5}{N} = \dfrac{D_5}{d_5}$

but $\dfrac{D_5}{d_5} = \dfrac{d_1}{D_1}$

Therefore, $\dfrac{n_1}{N} = \dfrac{N}{n_5}$ (14)

In a similar manner, $\dfrac{n_2}{N} = \dfrac{N}{n_4}$

and $N = n_3$

That is: *When equal stepped pulleys are used the speeds of the driven shaft must be so chosen that the speed of the driving shaft is a mean proportional*

between the speeds of the driven shaft for belt positions symmetrically either side of the middle.

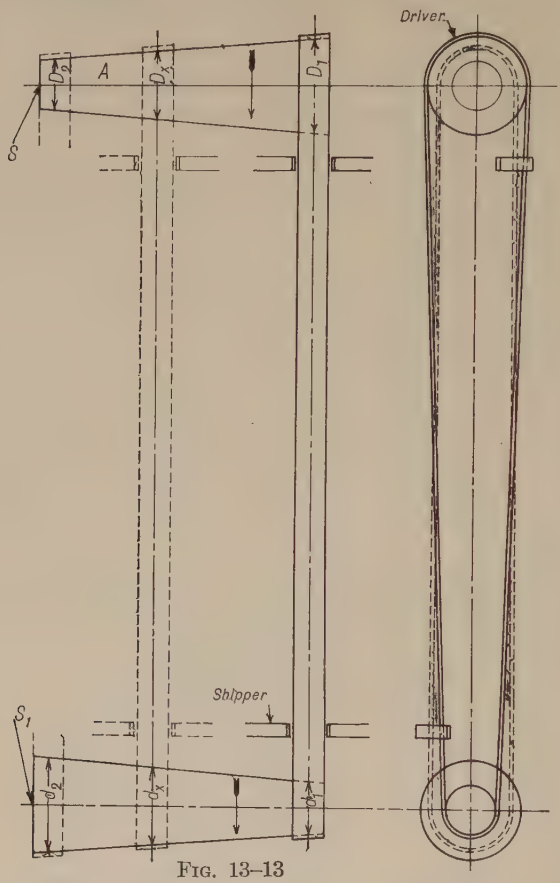

FIG. 13–13

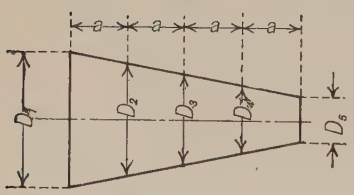

FIG. 13–14

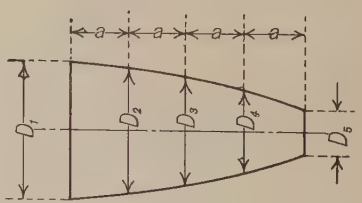

FIG. 13–15

Example 7. A pair of equal three-stepped pulleys, Fig. 13–12, are to carry a belt to connect two shafts. The driving shaft makes 120 rpm, and the lowest speed of the driven shaft is 60 rpm. To find the other two speeds of the driven shaft.

$$\frac{n_1}{N} = \frac{N}{n_3}$$

or $$\frac{n_1}{120} = \frac{120}{60}$$

Therefore $$n_1 = 240$$

$$n_2 = N = 120$$

If the step diameters are to be calculated, it will be done by the methods explained in § 13–12 or § 13–13 according as the belt is crossed or open.

13–15. Speed Cones. Sometimes, instead of stepped pulleys, pulleys which are approximately frustums of cones are used, as shown in Fig. 13–13. Here the working diameters of the pulleys, as D_x and d_x for any belt position, are measured at the middle of the belt. To design such a pair of pulleys a series of diameters D_1, D_2, D_3, etc. (Fig. 13–14), may be calculated in the same way as steps and plotted at equal distances (a) apart, then a smooth line drawn through their ends, as shown. The length (a) does not affect the problem except as it makes the cone longer or shorter. The contours may be straight lines as in Fig. 13–14, or curves as in Fig. 13–15.

When cone pulleys are used, a *shipper* must guide each part of the belt near the point where it runs on to the pulley (see Fig. 13–13); otherwise the belt will tend to climb toward the large end of each pulley. Both shippers must be moved simultaneously when the belt is shifted.

13–16. Belt Connections between Shafts Which are Not Parallel. Non-parallel shafts may be connected by a flat belt with satisfactory results, provided the pulleys are so located as to conform to a fundamental principle which governs the running of all belts, namely: The point where the pitch line of the belt leaves a pulley must lie in a plane passing through the center of the pulley toward which the belt runs. In other words, *a belt leaving a pulley may be drawn out of the plane of the pulley, but when approaching a pulley its center line must lie in the mid plane of that pulley.* This may be seen by a reference to Fig. 13–16. Here the shafts S and T are intended to turn in the directions indicated by the arrows. Considering Elevation A, the pitch line of the belt leaves the pulley M at the point a. If the pulley N is in such a position on the shaft T that a plane through the middle of its face contains the point a, the belt will run properly on to pulley N. XX is the trace of this plane and evidently contains point a. Similarly, in Elevation B, the pitch line of the belt leaves the pulley N at b_1 and M is so located on shaft S that a plane YY through the middle of its face contains b_1.

Changes in the directions of rotation of either pulley would necessitate changes in their relative positions.

In Fig. 13–16 the pulleys are at 90° with each other. The belt would run equally well if the pulleys were turned at any angle about XX as an axis.

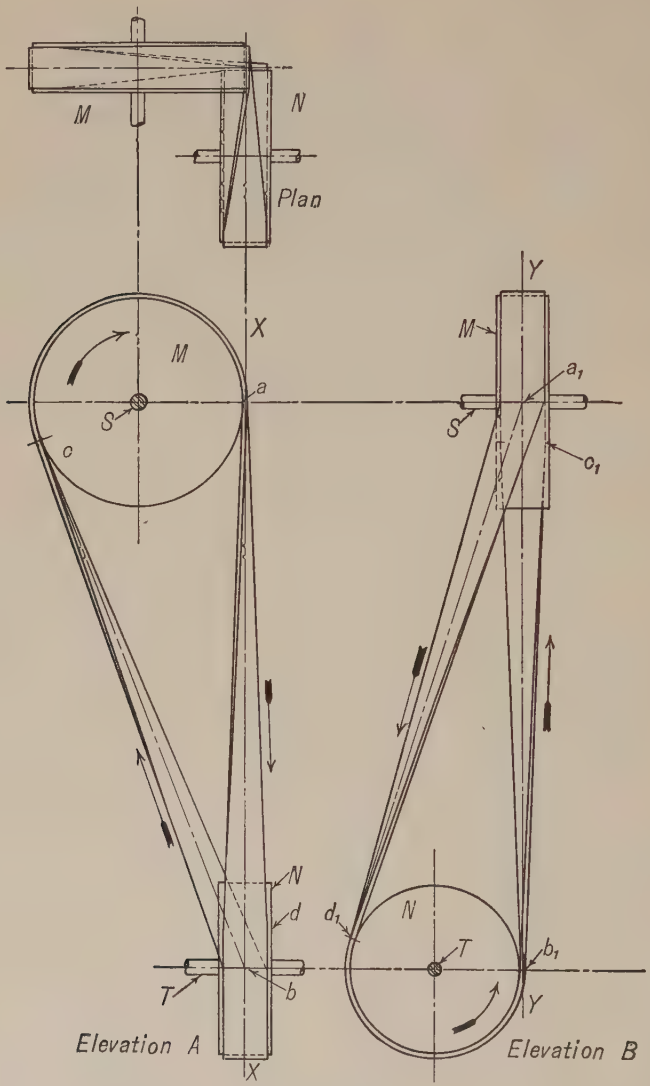

Fig. 13–16

13–17. Quarter-Turn Belt. A belt which connects two non-intersecting shafts at right angles with each other, similar to that in Fig. 13–16, is called a **quarter-turn** belt. Emphasis should be laid on the fact that, for any given setting of the pulleys, the shafts must always turn in the

direction in which they were designed to turn. If the direction of rotation is changed without resetting the pulleys, the belt will immediately leave the pulleys. For this reason simple quarter-turn belts like that illustrated above are likely to give trouble if used in places where there is possibility of the shafting turning backwards even a small fraction of a turn. If this should happen to a small belt, it could easily be replaced on the pulleys; for a large belt, however, the replacing would be more difficult.

13–18. Reversible Direction Belt Connection between Non-Parallel Shafts — Guide Pulleys. If the connection between two non-parallel shafts is to be such that the shafting may run in either direction and still have the pulleys deliver the belt properly, in accordance with the fundamental law already explained, it is necessary to make use of intermediate pulleys to guide the belt ino the proper plane. Such pulleys are called **guide pulleys.**

13–19. Examples of Belt Drives — Method of Laying Out. The following examples will illustrate two of the types of belt drives which may occur and will give some idea of the method of procedure in designing such drives.

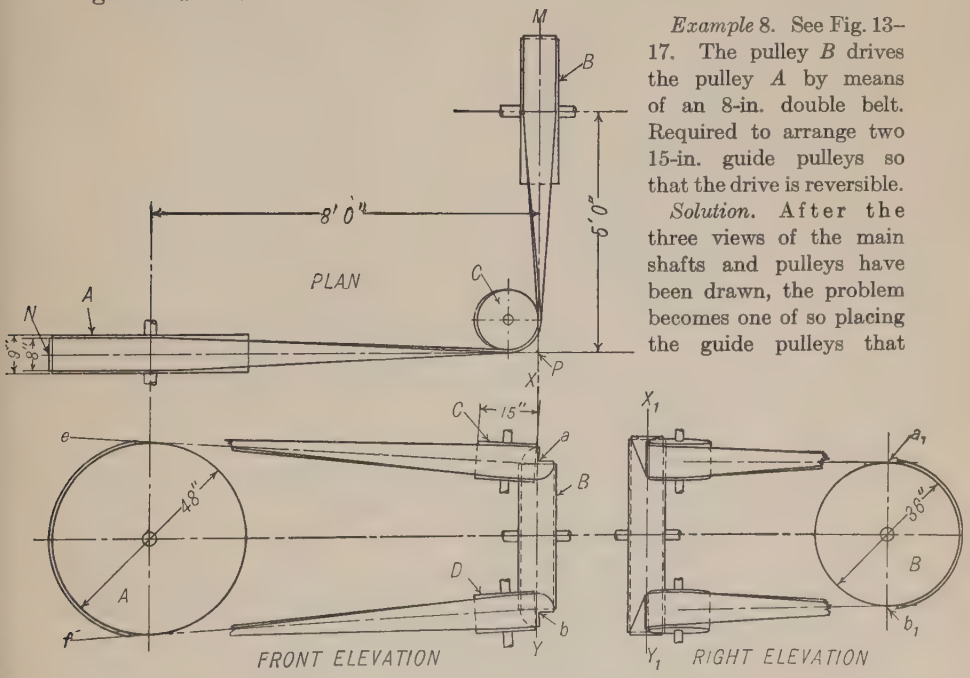

Fig. 13–17

Example 8. See Fig. 13–17. The pulley *B* drives the pulley *A* by means of an 8-in. double belt. Required to arrange two 15-in. guide pulleys so that the drive is reversible.

Solution. After the three views of the main shafts and pulleys have been drawn, the problem becomes one of so placing the guide pulleys that they will conduct the belt in either direction. There are a great many possible solutions of this problem, but that shown in Fig. 13-17 is the simplest.

In the front elevation the points a and b are the center points of the upper and lower contour elements of the pulley B. From a and b draw lines ae and bf tangent to pulley A. The center planes of the guide pulley C must contain the line ae and the center plane of the guide pulley D must contain the line bf. C will appear in this view, therefore, as a rectangle with one end passing through a and D will appear as a rectangle with one end passing through b. In the other views the edges of the guide pulleys will appear as ellipses, as shown.

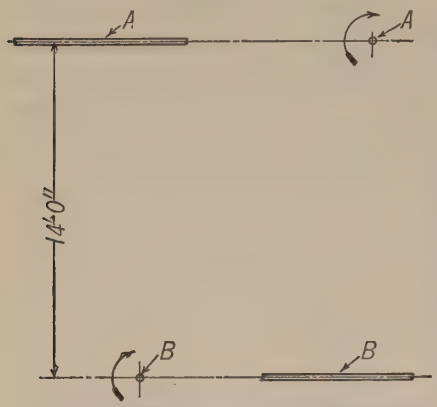

FIG. 13–18

Example 9. Given two shafts at right angles, located as shown in Fig. 13–18. Shaft A carries a 52-in. pulley which drives a 60-in. pulley on shaft B by means of a double belt 12 in. wide. The ordinary direction of rotation is as shown by the arrows. One guide pulley 30 in. in diameter is to be so located that the direction of rotation may be reversed without the belt running off. When turning in the direction shown, the tight side of the belt is to run direct from driven to driving pulley in a vertical line, the loose side returning around the guide pulley.

The main pulleys are 14 in. wide. Two elevations and a plan are to be drawn.

Solution. Locate the two main pulleys so that the pitch line of the tight side of the belt is the line of intersection of the pulley planes.

To draw the guide pulley proceed as follows (see Fig. 13–19): The distance of this guide from either one of the main pulleys would be governed somewhat by convenience in actually setting up the bearings to support it, and partly also by the relative sizes of the main pulleys. It is desirable so to locate it as to give the least possible abruptness to the bend in the belt. In this case there has been selected a point C in the line of intersection of the two main pulley planes which is 6 ft 6 in. below the axis of the upper shaft. This point will be at C_L and C_P in the two elevations. From C_L draw a line tangent to the lower pulley at D_L and project across, getting the other view of this point at D_P. In a similar way draw a line from C_P tangent to the upper pulley at E_P and project across to find E_L. We now have the two projections of two lines CD and CE drawn from a point in the intersection of the pulley planes tangent to the two pulleys, and the guide pulley must be set in such a position that its center plane will contain these two lines. The problem then is to draw the projections of the guide pulley when so set. Either elevation may be drawn first; let us start with the left elevation. Here C_LD_L shows in its true length and the line CD itself may be considered as lying in the plane of the paper. The line CE has

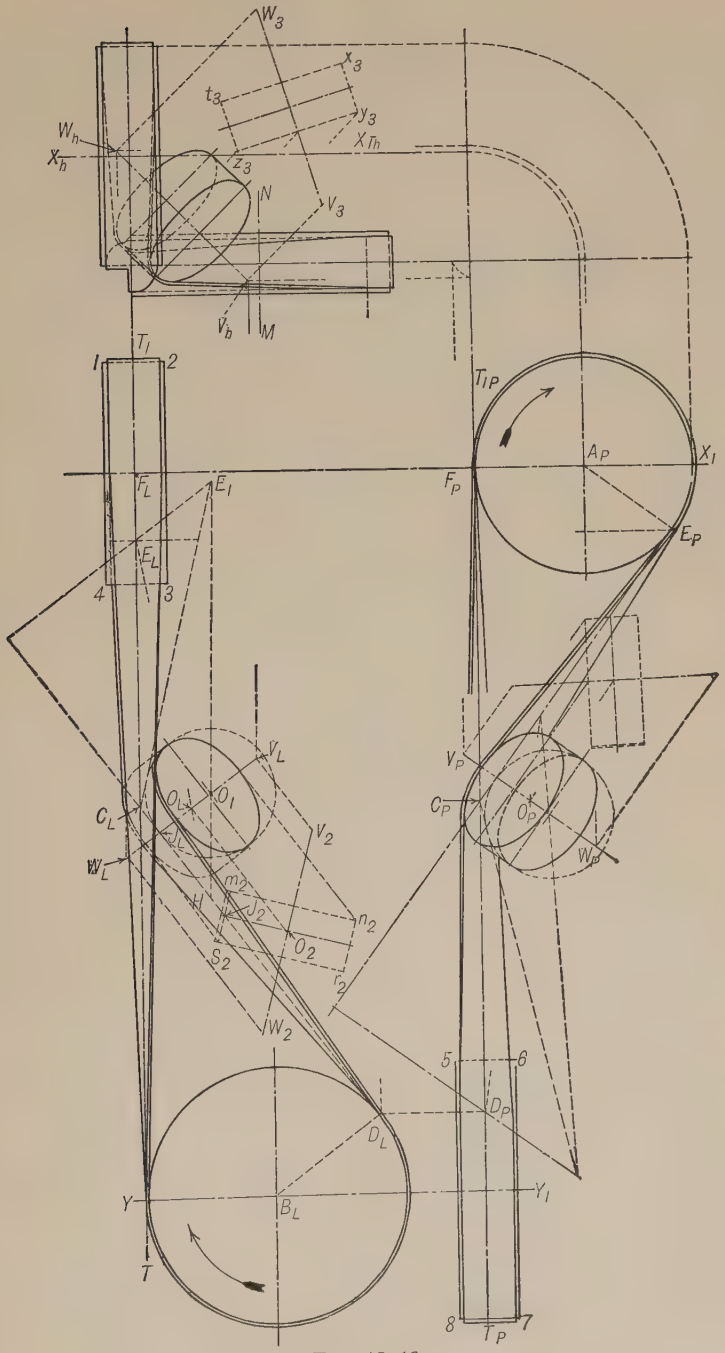
W3
x3
t3
y3
Wh
XTh
Xh
z3
N
V3
Vh
M
T1
1
2
T1P
AP
X1
FL
E1
FP
EP
EL
4
3
VL
VP
OL
O1
CL
CP
OP
V2
JL
WL
WP
m2
H
J2
n2
O2
S2
r2
W2
5
6
DP
DL
Y
BL
Y1
T
8
TP
7

FIG. 13–19

one end C_L in the plane of the paper while the line itself really slants down below the paper. The true size of the angle which it makes with the plane of the paper is equal to the angle $E_PC_PF_P$. D_LC_L is the trace, or line of intersection with the paper, of the plane containing CD and CE.

Now swing this plane up into the paper to get the true angle between CD and CE. To do this produce D_LC_L to the left and through E_L draw a line perpendicular to D_LC_L. From C_L with a radius equal to the true length of CE (that is, with radius C_PE_P) cut this perpendicular at E_1 and join E_1 to C_L. The angle $E_1C_LD_L$ is the true angle between the lines EC and DC. Set the compasses with a radius equal to the radius of the guide pulley and find by trial the center O_1 about which a circle of this radius may be drawn tangent to C_LE_1 and C_LD_L. This point shows the real position of the center of the middle circle of the guide pulley relative to the lines CE and CD. The next step is to revolve O_1 back to find its projection relative to C_LE_L and C_LD_L. To do this draw a line through E_1 and O_1 meeting C_LD_L at H_1; then join H_1 to E_L. Through O_1 draw a line perpendicular to D_LC_L meeting H_1E_L at O_L and C_LD_L at J_L. Then O_L is the projection of the center point of the pulley. To draw the projections of the edges of the pulley select any point as J_2 in the line C_LD_L, draw a line through O_L parallel to C_LD_L, and from J_2 with a radius equal to the radius of the guide pulley cut this line at O_2. Draw a line through J_2 and O_2, also a line V_2W_2 through O_2 perpendicular to J_2O_2. On these two lines as center lines construct the rectangle $m_2n_2r_2s_2$ of length equal to the diameter of the guide pulley and width equal to the width of face of the same. This rectangle is the side view of the guide pulley when revolved up into the plane of the paper, the line V_2W_2 being the center line of its shaft. The projection of the pulley consists of two equal ellipses with major axes equal to the diameter of the guide pulley and minor axes found by projecting the points m_2n_2 and s_2r_2 on to the line O_LJ_L, as shown. If a definite length V_2W_2 is chosen for the shaft, the projections of the ends of the shaft are found at V_L and W_L. The right elevation of the guide pulley and the axis of its shaft are found by a method exactly similar to that just described.

The plan view of the guide pulley is found by first finding the plan projections V_h and W_h of the two ends of the shaft by projecting up from the two elevations, then revolving this line V_hW_h over until it comes into the plane of the paper, as shown at V_3W_3. On this line is drawn the rectangle $t_3x_3y_3z_3$, representing the pulley, and the axes of the ellipses which constitute the plan view of the pulley are found by projecting the rectangle $t_3x_3y_3z_3$ on to V_hW_h, as shown.

13–20. Crowning of Pulleys. If a belt is led upon a revolving conical pulley, it will tend to lie flat upon the conical surface, and, on account of its lateral stiffness, will assume the position shown in Fig. 13–20. If the belt travels in the direction of the arrow, the point a will, on account of the pull on the belt, tend to adhere to the cone and will be carried to b, a point nearer the base of the cone than that previously occupied by the edge of the belt: the belt would then occupy the position shown by the dotted lines. Now if a pulley is made up of two equal cones placed base to base, the belt will tend to climb both, and would thus run with its center line on the ridge formed by the union of the two cones. In practise, pulley rims are made slightly crowning, except where the belt must occupy different parts of the same pulley.* In Fig. 13–20 two common forms of rim sections are shown at C and D; that shown at C is more commonly met with, as it is the easier to construct.

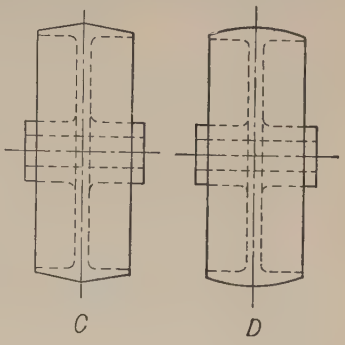

Fig. 13–20

Fig. 13–21

When pulleys are located on shafts which are slightly out of parallel, the belt will generally work toward the edges of the pulleys which are nearer together. The reason for this may be seen from Fig. 13–21. The pitch line of the belt leaves pulley A at point a. In order to contain this point the center plane of pulley B would have to coincide with XX_1. That is, the belt should approach B in the plane XX_1. Similarly, the belt should approach A in the plane Y_1Y. The result of this action is that the belt works toward the left and tends to leave the pulleys.

* The amount of crowning varies from about $\frac{1}{16}$ in. on a pulley 6 in. wide to about $\frac{1}{4}$ in. on a pulley 30 in. wide. In general it may be assumed about 1 per cent of the width of the face.

13–21. Tight and Loose Pulleys are used for throwing machinery into and out of gear. They consist of two pulleys placed side by side upon the driven shaft CD (Fig. 13–22); A, the tight pulley, is keyed to the shaft; while B, the loose pulley, turns loose upon the shaft and is kept in place by the hub of the tight pulley and a collar. The driving shaft carries a pulley G, whose width is the same as that of A and B put together, or twice that of A. The belt, when in motion, can be moved by means of a *shipper* that guides its advancing side, either on to the tight or the loose pulley. The pulley G (Fig. 13–22) has a flat face, because the belt must occupy different positions upon it, while A and B have crowning faces, which will allow the shifting of the belt and will retain it in position when shifted upon them.

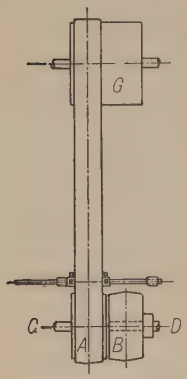

FIG. 13–22

13–22. V-Belts. A type of belting much used for transmitting small quantities of power is known as **V-Belting.** Fig. 13–23 shows a cross-section of such a belt and a portion of the pulley. The belt is usually a "rubber belt," that is, fabric impregnated with rubber. The slope of the sides of the groove in the pulley is the same as the slope of the edges of the belt, so that surface contact occurs between the edges of the belt and the pulley. As the tension increases, the belt wedges, thus reducing the tendency to slip.

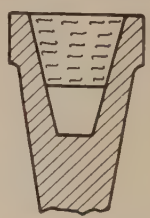
FIG. 13–23

If the power to be transmitted exceeds the capacity of a single belt, two or more may be used, each having its own pulley groove.

Various advantages are claimed for this type of belting, such as high efficiency, silent operation, adaptability to drives with pulleys at short distances on centers, high speed ratios, etc.

They should not be used where temperatures are very high, where there is likely to be excess of oil, or in places where it is difficult to put on an endless belt.

In general, if longer center distances are possible or necessary, the flat belt may be more desirable.

13–23. Variable Speed Transmission. The stepped pulleys and speed cones previously considered may be regarded as the elementary mechanisms through which one shaft running at a constant speed may drive another shaft at a variety of speeds. In both those cases the speed is changed by moving the belt along the axes of the pulleys to

make use of a different pair of working diameters on the driving and driven pulleys.

Several devices accomplish a similar purpose in a different way. One of these, the *Reeves variable-speed transmission*, is shown in Fig. 13–24. The upper shaft T is driven from the source of power (in this case a motor). The lower shaft S is driven from T through a V-shaped belt. Each of the pulleys for the belt consists of a pair of beveled disks keyed to the shaft so that disks and shaft must turn together, but the disks are free to be moved along the shaft. The two disks at the right are connected to the lever L on opposite sides of its fulcrum, and the two disks at the left are similarly connected to lever M. The shaft H has a right-hand screw at one end and a left-hand screw at the other end working in nuts attached to the levers L and M respectively. By turning the shaft H by the hand wheel W the levers are swung in opposite directions about their respective fulcrums, thus causing the two disks on one shaft to approach each other at the same time that the two disks on the other shaft separate. Bringing the two disks nearer together causes the V-shaped belt to be in contact with them farther out from the axis, and separating them causes the belt to be in contact nearer the axis. Thus the effective radius of one pulley is increased at the same time that the effective radius of the other pulley is decreased. In this way the ratio of driving diameter to driven diameter is readily changed, thus changing the speed of shaft S from which belt or a gear train may drive to the shaft or machine where the power is required.

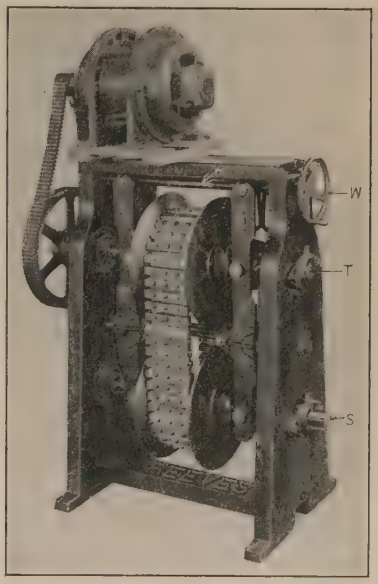

FIG. 13–24

Bearings and connections are carefully designed to avoid loss of power in the transmission, and suitable adjusting and equalizing mechanisms are provided to insure proper tension in the belt. Either shaft may be the constant speed driver. The transmission may be of the vertical type as shown in Fig. 13–24 or of the horizontal type.

13–24. Ropes and Cords. Power is often transmitted by means of ropes running over pulleys, called sheaves, having grooved surfaces.

For large amounts of power inside of buildings the ropes are made of hemp or similar material. For long-distance drives and drives which are exposed to the weather wire ropes are used. For small amounts of power on machines, cords of cotton are common.

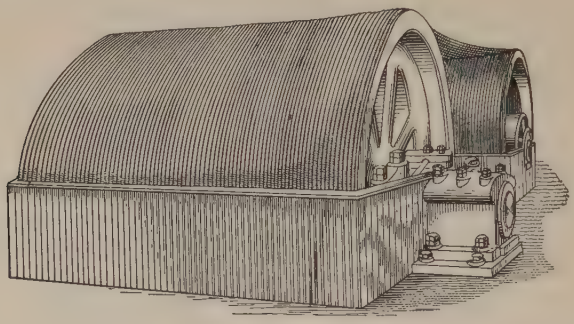

Fig. 13–25

13–25. Systems of Driving with Hemp Rope. There are two distinct systems of rope driving, each of which has its advantages. One is the **multiple rope** or **English system.** This is the simpler of the two and consists of independent ropes running side by side in grooves on the pulleys. A large drive using this system is shown in Fig. 13–25.

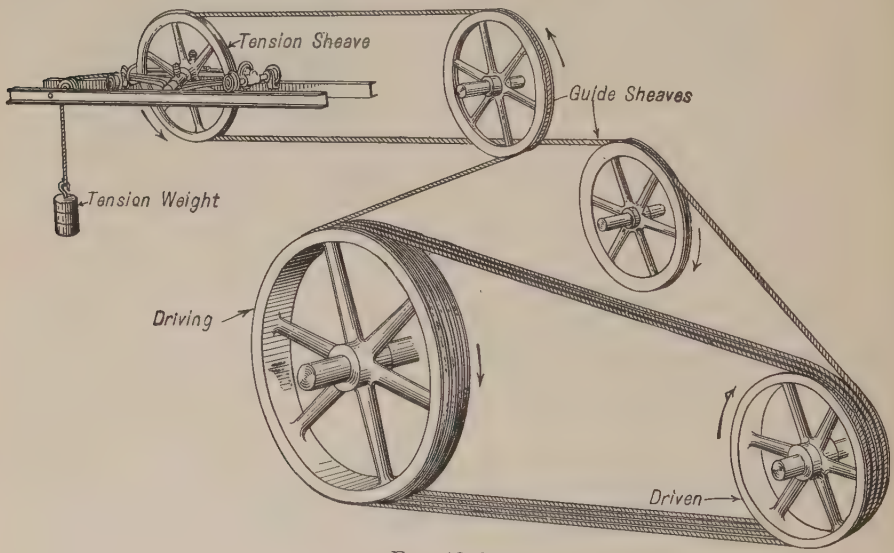

Fig. 13–26

The other system is the **continuous** or **American system,** shown in Figs. 13–26 and 13–27. One rope is wound around the driving and

driven pulleys several times, and conducted back from the last groove of one pulley to the first groove of the other pulley by means of one or

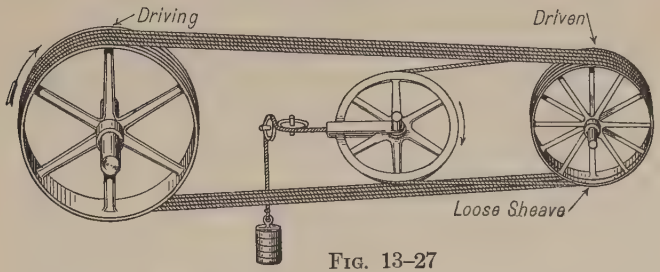

Fig. 13–27

Fig. 13–28

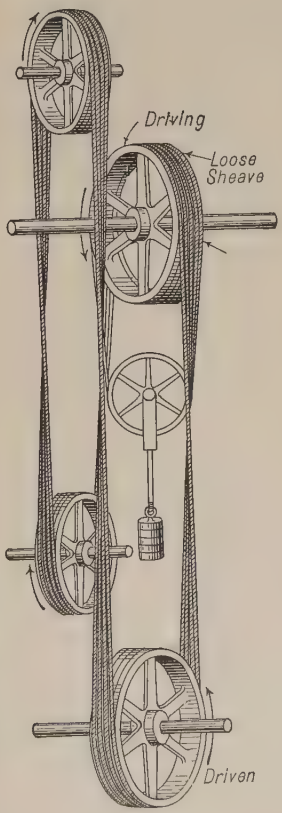

Fig. 13–29

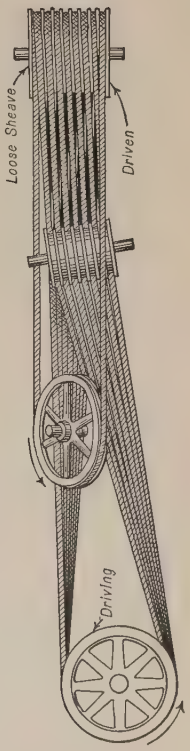

Fig. 13–30

more intermediate pulleys which also serve the purpose of maintaining a uniform tension throughout the entire rope. The slack should be taken

up on the loose side just off the driving sheave. There are two ways of accomplishing this. *First* (see Fig. 13–26), the rope is conducted from an outside groove of the driver to the tension sheave and after passing around it is returned to the opposite outside groove of the driven sheave. *Second* (see Fig. 13–27), where it is inconvenient to take the slack directly from the driver the rope is passed around a loose sheave on the driven shaft, thence over the tension sheave, and is returned to the first groove in the driven sheave. Figs. 13–28, 13–29, and 13–30 show further examples.

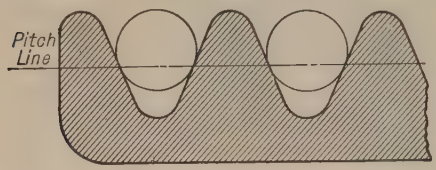

FIG. 13–31

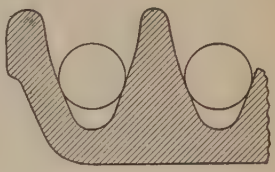

FIG. 13–32

13–26. Grooves for Hemp Rope. The shape and proportions of the grooves used on many pulleys for hemp rope depend somewhat upon the system used. Figs. 13–31 and 13–32 show two forms much used. Fig. 13–33 illustrates the groove used on idle wheels.

It will be noticed that the rope wedges into the grooves on the driving and driven pulleys, while on the loose or idle pulleys it rides on the bottom of the groove.

13–27. Small Cords are often used to connect non-parallel axes, and very often the directional relation of these axes must vary. The most common example is found in spinning frames and mules, where the spindles are driven by cords from a long, cylindrical drum, whose axis is at right angles to the axes of the spindles. In such cases, the common perpendicular to the two axes must be contained in the planes of the connected pulleys; both pulleys may be grooved, or one may be cylindrical, as in the example given above. Fig. 13–34 shows two grooved pulleys, whose axes are at right angles to each other, connected by a cord which can run in either direction, provided the groove is deep enough. To determine whether a groove has sufficient depth in any case, the following construction (Fig. 13–35) may be used. Let AB and A_1B_1 be the projections of the approaching

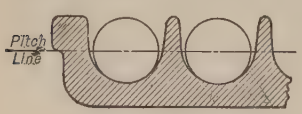

FIG. 13–33

FIG. 13–34

side of the cord; pass a plane through AB parallel to the axis of the pulley; it will cut the hyperbola CBD from the cone which forms one side of the groove. The cord will lie upon the pulley from B to I, where it will leave the hyperbola on a tangent. If the tangent at I falls well within the edge of the pulley at C, the groove is deep enough. It will usually be sufficient to draw a straight line, as ab (Fig. 13–34), and see that it falls well inside of the point corresponding to C in Fig. 13–35.

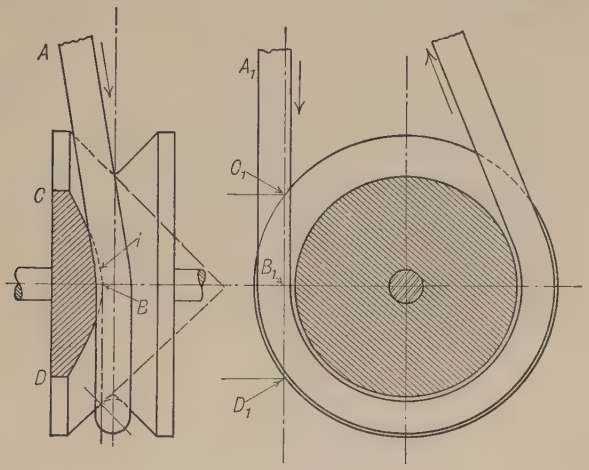

Fig. 13–35

13–28. Drum or Barrel. When a cord does not merely pass over a pulley, but is made fast to it at one end and wound upon it, the pulley usually becomes what is called a **drum** or **barrel.** A drum for a round rope is cylindrical and the rope is wound upon it in helical coils. Each layer of coils increases the effective radius of the drum by an amount equal to the diameter of the rope. A drum for a flat rope has a breadth equal to that of the rope, which is wound upon itself in single coils, each of which increases the effective radius by an amount equal to the thickness of the rope.

13–29. Wire Ropes. Wire rope is well adapted for the transmission of large powers to great distances, as for instance in cable and inclined railways. Its rigidness, great weight, and rapid destruction due to bending, however, unfit it for use in mill service, where the average speed of rope is about 4000 ft per min. As the easiest way to break wire is by bending it, ropes made of it, by any method whatsoever, have proved unsatisfactory for drives of short centers and high speed unless the diameters of the sheaves are large enough to avoid bending the rope to strain it above the elastic limit.

Wire ropes will not support without injury the lateral crushing caused by the V-shaped grooves; hence it is necessary to construct the pulleys with grooves so wide that the rope rests on the rounded bottom of the groove, as shown in Fig. 13–36, which shows a section of the rim of a wire-rope pulley. The friction is greatly increased, and the wear of the rope diminished, by lining the bottom of the groove with some elastic material, as gutta-percha, wood, or leather, made up in short sections and forced into the bottom of the groove.

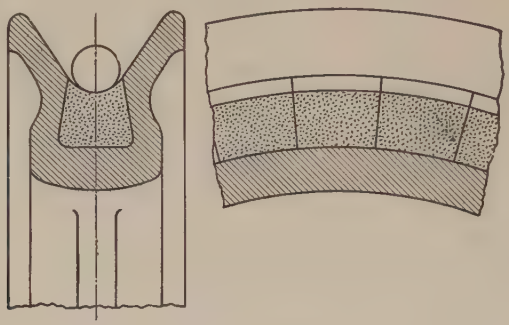

Fig. 13–36

13–30. Chains are frequently used as connectors between parallel axes and also for conveying and hoisting machinery and for similar purposes. The wheels over which chains run are called sprockets and have their surfaces shaped to conform to the type of chain used.

Chains may be classified as follows:

1. *Hoisting chains*
2. *Conveyor chains*
   - Detachable or hook joint
   - Closed joint
3. *Power-transmission chains*
   - Block
   - Roller
   - Inverted tooth

13–31. Hoisting Chains. The most common form of hoisting chain consists of solid oval links as shown in Fig. 13–37. The form of sprocket used for such a chain is evident from the figure.

13–32. Conveyor Chains may be of the detachable or hook joint type as shown in Fig. 13–38, or of the closed joint type illustrated in Fig. 13–39.

The design of the sprocket teeth is largely empirical, care being taken to have the teeth so shaped and spaced that the chain will run on to and off from the sprockets smoothly and without interference even

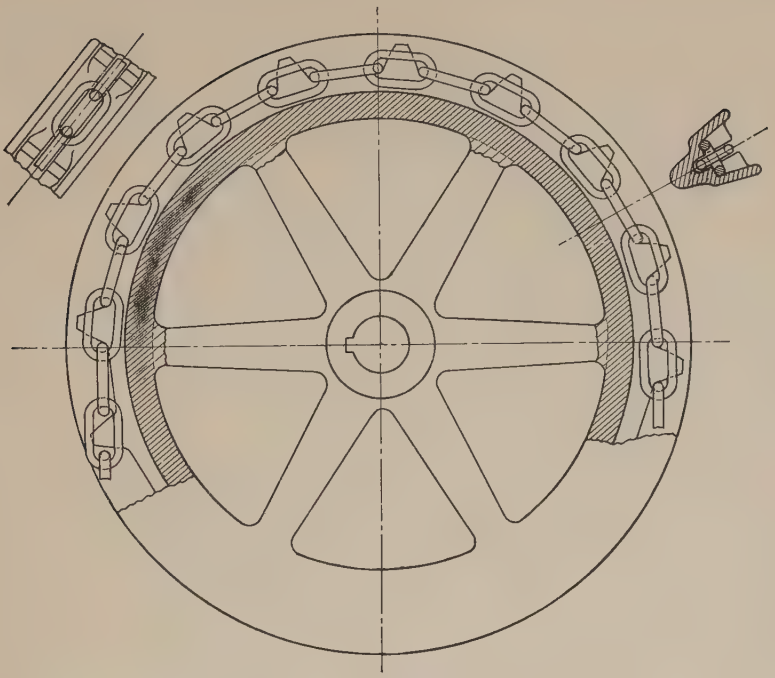

FIG. 13–37

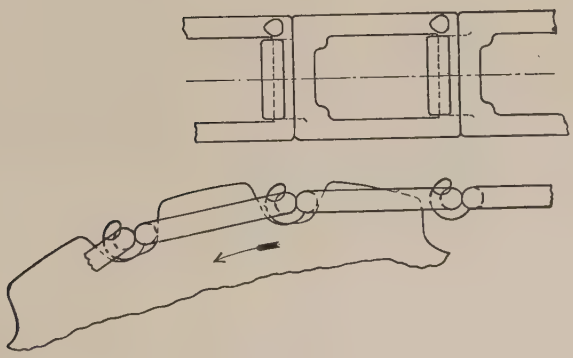

FIG. 13–38

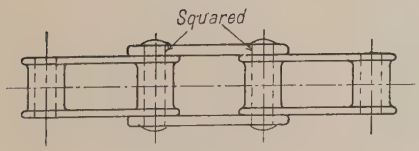

FIG. 13–39

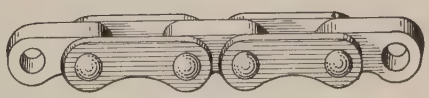

FIG. 13–40

after it has stretched or worn somewhat. Chains of this general class are often used for transmitting power at low speeds, as in agricultural machinery. They are usually made of malleable cast links and lack the smooth running qualities of the more carefully made chains.

13–33. Power Transmission Chains. This class includes the three types known as **block, roller,** and **silent.** The chains are made of steel, accurately machined, with wearing parts hardened, and run on carefully designed sprockets. In the following discussion no attempt is made to give an exhaustive treatment of the subject, but merely to give some idea of the character of the three types and some of the points which need to be considered in their design.

13–34. Block Chains. Fig. 13–40 shows a block chain made by the Diamond Chain & Mfg. Co.

Chains of the block type are used for the transmission of power at comparatively low speeds. They are also used to some extent as conveyor chains and for other purposes in place of the malleable conveyor chains.

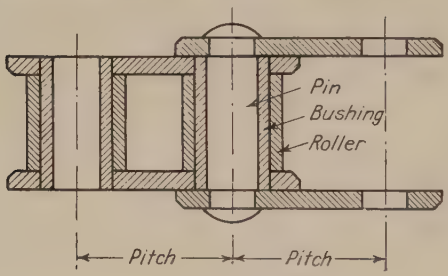

FIG. 13–41

13–35. Roller Chains. Fig. 13–41 illustrates a form of roller chain similar to one made by the Diamond Chain & Mfg. Co., and Fig. 13–42 shows the same chain in place on the sprocket.

13–36. Design of Standard Sprocket Teeth for Roller Chains. Fig. 13–43 shows the construction for the outline of the approved standard sprocket teeth for a roller chain. This figure, together with much of the following text, is taken from the catalogue of the Diamond Chain & Mfg. Co.

Let P = pitch of chain; D = nominal diameter of roller;

T = number of teeth; $r = \dfrac{1.005\ D + 0.003 \text{ in.}}{2}$

$\alpha = 35° + \dfrac{60°}{T}$; $\beta = 18° - \dfrac{56°}{T}$; $\theta = \dfrac{180°}{T}$; $ac = 0.8\ D$;

$ab = 1.24\ D$

$$\textit{Diameter pitch circle} = \frac{P}{\sin \theta} = \frac{P}{\sin \dfrac{180°}{T}} \qquad (15)$$

Draw an arc of the pitch circle and draw the radius and tangent at any point a on the circle. Lay off angle α and locate point c. Draw

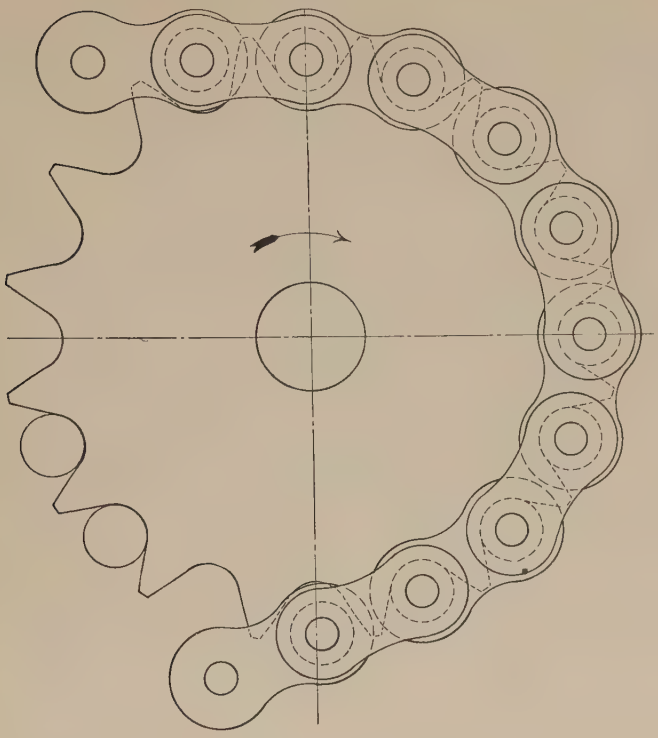

FIG. 13–42

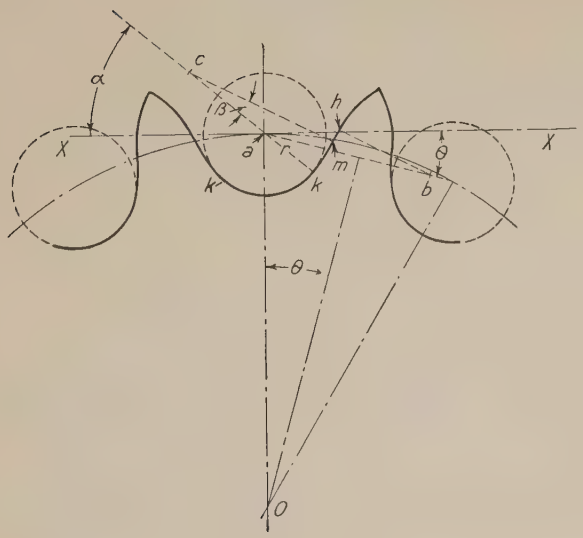

FIG. 13–43

the " seating arc " kk_1 with radius r. From c as a center and radius ck draw the " working curve " km. At m draw a straight line mh tangent to km. Locate point b and from b as a center draw the " topping curve " tangent to mh. A similar construction for the other side of the tooth will complete the tooth outline.

13–37. Chain Length. The length of the chain required for a given pair of sprockets set at a known distance on centers may be calculated according to the same general method previously given for an open belt. (See § 13–10.) Since the pitch line of the sprocket is a polygon instead of a circle, equation (11), if applied to a chain, will give a length slightly in excess of the actual length.

The open belt formula may be adapted to the chain as follows: let D and d be the pitch diameters, in inches, of the sprockets having N and n teeth respectively. D_p and d_p the same diameters in pitches. P = pitch of chain; C = distance between centers of sprockets, in inches; C_p = center distance in pitches; L = length of chain in inches; L_p = length of chain in pitches.

From equation (11)

$$L = \frac{\pi}{2}(D + d) + 2C + \frac{(D - d)^2}{4C} \text{ (nearly)}$$

Then
$$L_p = \frac{\pi}{2}(D_p + d_p) + 2C_p + \frac{(D_p - d_p)^2}{4C}$$

It is evident that the first term of this equation is half the sum of the circumferences of the pitch circles. The corresponding half sum of the perimeters of the pitch polygons is $\frac{N + n}{2}$. Also, from equation (15)

$$D = \frac{P}{\sin \frac{180^\circ}{N}} = P \operatorname{cosec} \frac{180^\circ}{N} \quad \text{and} \quad d = P \operatorname{cosec} \frac{180^\circ}{n}$$

Therefore

$$D_p = \operatorname{cosec} \frac{180^\circ}{N} \quad \text{and} \quad d_p = \operatorname{cosec} \frac{180^\circ}{n}$$

Substituting these values in the first and last terms in the above equation for L_p gives

$$L_p = \frac{N + n}{2} + 2C_p + \frac{\left(\operatorname{cosec} \frac{180^\circ}{N} - \operatorname{cosec} \frac{180^\circ}{n}\right)^2}{4C_p} \text{ nearly} \qquad (16)$$

Equation (16) gives approximately the theoretical minimum length of chain in pitches, for any given values of N, n, and C. The actual chain used must contain an integral number of pitches, hence the length must be increased, above that calculated, enough to make it a multiple of the pitch.

13–38. Angular Speed Ratio and Distance between Centers of Sprockets. Since the pitch line of the chain lies on the driving sprocket as a part of a polygon it follows that, if this sprocket is turning at a constant angular speed, the speed with which the chain is drawn toward this sprocket varies from a maximum when the pitch line is in the position shown in full lines (Fig. 13–44) to a minimum for the dotted-line position. This variation of chain speed tends to cause a variation in

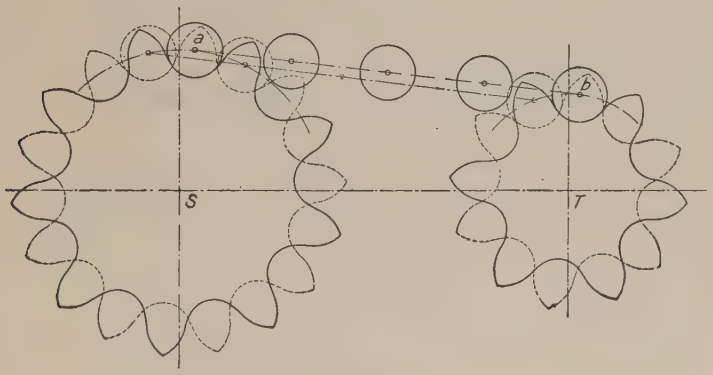

Fig. 13–44

angular speed of the driven sprocket. It is desirable so to adjust the center distance that the span of the chain (ab) between sprockets shall be equal to an integral number of pitches, thus reducing the angular speed variation to a minimum. The relation between the center distance and the span to satisfy this condition is expressed by the equation

$$ST = \sqrt{\frac{(D - d)^2}{4} + (ab)^2}$$

It is better also to have the center distance such that the chain length will contain the pitch an *even* number of times thus avoiding the necessity of using a special or " offset link." Referring to Fig. 13–41 it will be seen that the chain consists of alternate narrow and wide links, the side plates of the narrow link fitting between the plates of the adjoining wide link. If the chain were to contain an odd number of links, it would be necessary to have one end of one link narrow and the other end wide. Such a link is called an offset link.

Center adjustment should be allowed to take up elongation due to wear. Some slack should always be allowed.

The center distance should not be less than 12 pitches nor less than the diameter of the larger sprocket.

13–39. Inverted Tooth Chains. While roller chains on sprockets as now designed can run quietly at fairly high speeds, the inverted tooth chain, commonly known in the United States as the **silent chain**, is widely used when maximum quietness is desired and where it is necessary to transmit heavier loads than can be carried by roller chains of the same pitch. These chains have no rollers, but the links themselves are so shaped that they engage directly with the sprocket teeth. Like the roller chains, they adapt themselves to the sprocket after the pitch of the chain has increased because of wear.

Two examples will serve to illustrate this type of chain. In selecting these examples no attempt has been made to illustrate the latest improvements, but merely to show the principle of action.

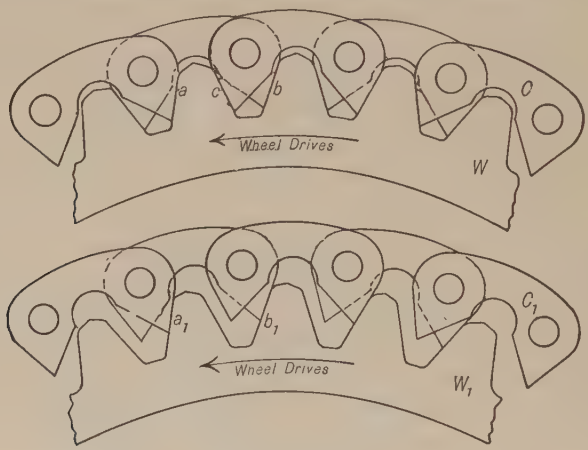

Fig. 13–45

13–40. Renold Inverted Tooth Chain. Fig. 13–45 shows a chain developed by Hans Renold. It consists of links C of a peculiar form with straight bearing edges a, b, which run over cut sprocket wheels with straightsided teeth whose angles vary with the diameter of the wheel. The chain may be made any convenient width, the pins binding the whole together. One sprocket of each pair is supplied with flanges to retain the chain in place. The upper drawing shows a new chain in position on its sprocket, the bearing parts of the links being on the straight edges of the links only, not on the tops or roots of the teeth. The chain thus adjusts itself to the sprocket at a diameter corresponding

with its pitch, and as any tooth comes into or out of gear there is neither slipping nor noise. The lower figure shows the position taken by a worn chain of increased pitch on the same wheel.

13–41. Morse Rocker-Joint Chain. This chain (Fig. 13–46) eliminates the sliding friction of the rivets as the chain bends around the sprocket. Instead of the ordinary pin bearing, a rocking bearing is provided at each joint. The following description, with slight changes, is taken from the catalogue of the Morse Chain Co. Two pins are employed at each joint; the left-hand pin *a* is called the seat pin and the right-hand pin *b* the rocker. Each is securely held in its respective end of the link. The seat pin has a plane surface against which the edge of the rocker pin rocks or rolls when the chain goes on and off the sprockets. The joint is so designed that the pressure due to tension of driving will be taken on a flat surface when in between the sprockets.

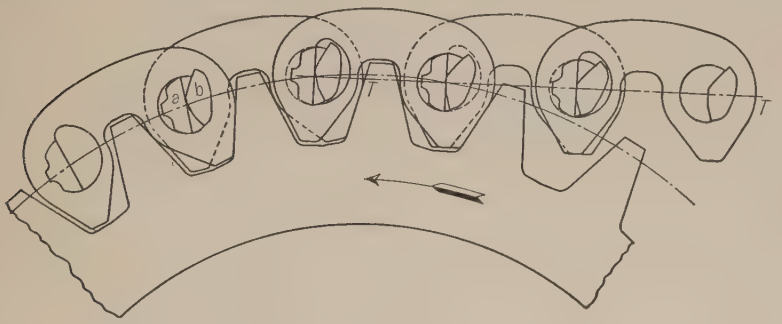

FIG. 13–46

Fig. 13–46 shows the chain on a driving sprocket running in the direction indicated by the arrows. The angle of the tooth to the line of the pull and any centrifugal force that may exist both tend to keep the link out to its true pitch diameter during the revolution of the wheel; it will fall below this point only when the pull of the slack side of the chain is greater than the forces in the opposite direction.

From this it will be seen that two forces are definitely operative to keep the chain in its proper pitch contact with the wheels by causing it to assume a larger and larger circle as the chain lengthens in pitch; thus, the driving load continues to be distributed over a large number of teeth.

The climbing, which compensates for the increase of pitch, is gradual, easily noticed in the running drive, does not decrease the efficiency of the transmission, and, as the chain lengthens and approaches the top of the teeth, gives fair warning of the necessity of replacement or repairs of the chain.

PROBLEMS

XIII–1. A shaft turning 120 rpm is to drive another shaft at 180 rpm. Find the diameters of the two pulleys, using integral number of inches for each diameter, to give as nearly as possible a belt speed of 2500 ft per min.

XIII–2. What horsepower may an 8-in. double belt be expected to transmit, assuming that its speed is 3300 ft per min and that it is not to be stressed more than 140 lb per in. of width and that the tension on the tight side is not more than $2\frac{1}{3}$ times that on the slack side?

XIII–3. The main driving pulley of a broaching machine is 18 in. in diameter and turns at a speed of 400 rpm. If the pulley is driven by a belt from a 10-hp motor developing its full rated power, what is the effective pull of the belt?

XIII–4. A shaft making 200 rpm carries a pulley 36 in. in diameter driven by a belt which transmits 5 hp. What is the effective pull in the belt? What should be the diameter of the pulley if the effective pull is to be 50 lb?

XIII–5. A 6-in. belt transmits 8 hp when running over a pulley 20 in. in diameter running 200 rpm. If the maximum allowable tension is 80 lb per in. of width and if the sum of the tensions is assumed to be constant, with what tension was the belt put on the pulleys?

XIII–6. What is the width of a fabric belt which transmits 45 hp when running on a 30-in. pulley which turns 550 rpm? The belt was put on with a tension of 70 lb. per in., the maximum tension is not to exceed 95 lb per in., neglecting centrifugal force, and it is assumed that the sum of the tensions is a constant.

XIII–7. Determine the width of a single belt to carry 40 hp when running on a pulley 48 in. in diameter which turns 300 rpm. The maximum tension per inch of width for a single belt is 65 lb, neglecting centrifugal force, and it is assumed that $T_1 = 2\frac{1}{3}\ T_2$.

XIII–8. A 3-in. belt is designed to stand a difference in tension of 50 lb per in. of width, neglecting centrifugal force. Find the least speed at which it can be driven in order to transmit 20 hp.

XIII–9. A rule known as the millwright's rule, sometimes used in belting, is as follows: A single belt will transmit 1 hp per in. of width at 1000 ft per min speed and a double belt 1 hp per in. of width at 560 ft per min speed.

What is the effective pull per inch of width in a single belt and in a double belt, working in accordance with this rule?

XIII–10. Two shafts 12 ft between centers carry pulleys 4 ft in diameter and 3 ft in diameter respectively, connected by a crossed belt. It is desired to put the belt on as an open belt. How long a piece must be cut out of it?

XIII–11. A pair of equal three stepped pulleys connect two shafts A and B by means of a crossed belt. A is the driver having a constant speed of 75 rpm. Highest speed of B is 225 rpm. Diameter of largest step is 15 in. Find the other two speeds of B and the diameters of all steps.

XIII–12. Using same data as in Problem XIII–11 except that belt is open, and distance between centers is 18 in., find the diameters of the middle pair of steps.

XIII–13. Shaft A, turning 120 rpm, drives shaft B at speeds of 80, 120, 180, and 240 rpm by means of a pair of stepped pulleys and a crossed belt. The diameter of the largest step on the driving pulley is 18 in. Calculate the diameters of all the steps of both pulleys.

XIII–14. Two shafts each carrying a four-step pulley, are to be connected by a crossed belt. The driving shaft is to turn 150 rpm while the driven shaft is to turn

50, 150, 250, and 600 rpm. The smallest step of the driver is 10 in. in diameter. Find the diameters of all the steps.

XIII–15. Solve the preceding problem if an open belt is used instead of a crossed belt and if the shafts are 30 in. apart.

XIII–16. Two shafts carrying five-step pulleys are to be connected by a crossed belt. The driver is to turn 150 rpm, while the follower is to have speeds of 50, 100, 150, 200, and 250 rpm. If the smallest step on either pulley is 8 in. in diameter, find the diameters of all the steps to two decimal places.

XIII–17. The feed mechanism of an upright drill is operated by an open belt running on three-step pulleys. The driving shaft turns 150 rpm, while the driven shaft turns 150, 450, and 900 rpm, the two shafts being 15 in. apart. If the largest diameter of the driver is 18 in., find the diameters of all the steps. If the steps of these pulleys had been calculated for a crossed belt but an open belt had been used on them, the belt would have been found too short to run on some of the steps. State approximately how much too short it would have been for the worst case.

XIII–18. A lathe having a five-step pulley is driven by a belt (assumed to be crossed) from a pulley of the same size on the countershaft. The countershaft is to have a constant speed, and the lathe is to have speeds of 60 rpm and 135 rpm when the belt is on the steps either side of the center step. If the minimum speed is 40 rpm and the smallest diameter 4 in., find proper speed of countershaft, maximum speed of lathe, and diameter of all steps on the pulleys.

XIII–19. Each of a pair of equal five-stepped pulleys has diameters 20, $17\frac{5}{8}$, $15\frac{1}{4}$, $12\frac{7}{8}$, $10\frac{1}{2}$ in. Were these pulleys designed for an open belt or a crossed belt? If the driving shaft turns 500 rpm, calculate the five speeds of the driven shaft.

XIII–20. In a pair of stepped pulleys the driver has diameters of 31.62, 25.5, 20.53, 10 in. The smallest diameter of the driven pulley is 7.91 in. and its largest diameter 30 in. Is the belt crossed or open? Calculate the distance between centers of the shafts and the other two diameters of the driven pulley.

XIII–21. Two shafts are connected by a crossed belt running on a pair of speed cones. The driving shaft has a constant speed of 135 rpm, while the driven shaft is to have a range of speeds from 45 to 300 rpm, the speeds to increase in arithmetical progression as the belt is moved equal distances along the cones. The smallest diameter of the driving cone is 3 in. Find the diameters of the cones at the ends and at two intermediate points. Plot the cones ($\frac{1}{4}$ size) if their length is 24 in.

XIII–22. A rope drive composed of 15 ropes is to transmit 120 hp. If the pitch diameter of one of the sheaves is 4 ft and if its angular speed is 1500 radians per minute, what is the effective pull in each rope?

XIII–23. A rope drive (multiple system) consisting of 15 ropes is transmitting 200 hp when the speed of the ropes is 1100 ft per min. The maximum tension per rope is 650 lb, which is $\frac{1}{4}$ the breaking strength of the rope (expressed as "a factor of safety of 4"). Find the ratio $\frac{T_1}{T_2}$. Suppose that 3 of the ropes should break, the remaining ropes carrying the whole load. If the ratio $\frac{T_1}{T_2}$ stays as before, what does the maximum tension become and what the factor of safety on the rope?

XIII–24. A motor running 500 rpm transmits 3 hp through a chain drive. The pitch diameter of the driving sprocket is 3 in. What is the effective pull in the chain, and what is the maximum tension, neglecting centrifugal force?

XIII–25. A chain drive is transmitting 3 hp when the speed of the chain is 900 ft per min. What is the effective pull in the chain? Suppose the speed of the chain to

be increased to 1200 ft per min, if the power transmitted remains the same as before, what is the effective pull?

XIII–26. Sketch shows the positions in front and side elevation of two shafts and pulleys. Pulley *A* 28 in. in diameter and turning 144 rpm drives *B* 252 rpm. Calculate the diameter of pulley *B*.

The drive is to be made reversible by using two guide pulleys 12 in. in diameter with shafts in the same vertical plane.

The maximum pull on the belt is not to exceed 70 lb per in. in width. Initial tension 50 lb. Calculate width of belt to transmit 5 hp.

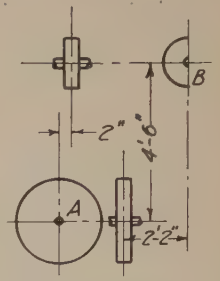

PROB. XIII–26

Draw front and side elevations of drive showing the guide pulleys. Draw pitch line of belt. Make all pulley faces same as belt width (whole inches). All shafts $1\frac{1}{2}$ in. in diameter. Scale: $\frac{1}{4}$ in. = 1 in.

Make no allowance for belt thickness in finding diameters and positions of pulleys.

Put calculations on drawing.

XIII–27. A 24-in. pulley on shaft *A* turning 150 rpm is to drive shaft *B* 200 rpm. Find diameter of pulley on shaft *B*. The drive is to be made reversible by using a 12-in. guide pulley. To locate the guide pulley choose a point in the intersection of the pulley planes 22 in. above the center of shaft *A*.

Show pitch line of belt and central circle of guide pulley in all three views. Use scale: $\frac{1}{4}$ in. = 1 in.

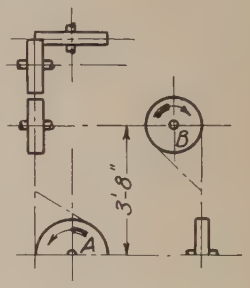

PROB. XIII–27

CHAPTER XIV

MISCELLANEOUS MECHANISMS — AGGREGATE COMBINATIONS — PULLEY BLOCKS — INTERMITTENT MOTION

14–1. Aggregate Combinations is a term applied to assemblages of pieces in mechanism in which the motion of the follower is the resultant of the motions given to it by more than one driver. The number of independently acting drivers which give motion to the follower is generally two, and cannot be greater than three, as each driver determines the motion of at least one point of the follower, and the motion of three points in a body fixes its motion.

By means of aggregate combinations we may produce very rapid or slow movements and complex paths, which could not well be obtained from a single driver.

The epicyclic gear trains discussed in Chapter X in reality come under the heading of aggregate combinations.

14–2. Aggregate Motion by Linkwork. Figs. 14–1 and 14–2 represent the usual arrangement of such a combination. A rigid bar ab has two points, as a and b, connected with independent drivers, while c may be connected with a follower. Let aa_1 represent the linear velocity of a, and bb_1 the linear velocity of b: to find the linear velocity of c. Consider the motions to take place separately; then if b were fixed, the linear velocity aa_1 given to a would cause c to have a velocity represented by cc_1. Considering a as fixed, the linear velocity bb_1 at b would give to c a velocity cc_2. The aggregate of these two would be the algebraic sum of cc_1 and cc_2. In Fig. 14–1 we have cc_1 acting to the left, while cc_2 acts to the right; therefore the resulting linear velocity of c will be $cc_3 = cc_1 - cc_2$ acting to the left, since $cc_1 > cc_2$. In Fig. 14–2, where both cc_1 and cc_2 act to the left, the result is $cc_3 = cc_1 + cc_2$ acting to the left. It will be seen that the same results could have been obtained by finding the instantaneous axis o of ab in each case, when we should have linear velocity c : linear velocity $a = co : ao$.

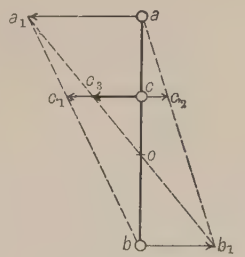

FIG. 14–1

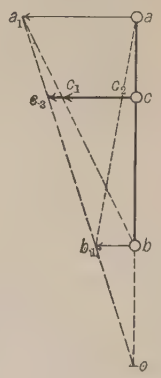

FIG. 14–2

In many cases the lines of motion are not exactly perpendicular to the link, nor parallel to each other, neither do the points a, b, and c necessarily lie in the same straight line, but often the conditions are approximately as assumed in Figs. 14–1 and 14–2, so that the error introduced by so considering them may be sufficiently small to be practically disregarded.

As examples of aggregate motion by linkwork we have the different forms of link motions as used in the valve gears of reversing steam engines. Here the ends of the links are driven by eccentrics, and the motion for the valve is taken from some intermediate point on the link whose distance from the ends may be varied at will, the nearer end having proportionally the greater influence on the resulting motion.

Fig. 14–3

A wheel rolling upon a plane is an example of aggregate motion, the center of the wheel moving parallel to the plane, and the wheel itself rotating upon its center. The resultant of these two motions gives the aggregate result of rolling.

14–3. Pulley Blocks for Hoisting. The simple forms of hoisting tackle, as in Fig. 14–3, are examples of aggregate combinations. The sheaves C and D turn on a fixed axis, while A and B turn on a bearing from which the weight W is suspended. Fig. 14–4 is in effect the same as Fig. 14–3, but gives a clearer diagram for studying the linear velocity ratio. Assume that the bar ab with the sheaves A and B and the weight W has an upward velocity represented by v. The effect of this at the sheave A, since the point c at any instant is fixed, is equivalent to a wheel rolling on a plane, and there would be an upward linear velocity at $d = 2\,v$. At the sheave B there is the aggregate motion due to the *downward* linear velocity at $e = 2\,v$ and the upward linear velocity of the axis $b = v$, giving for the linear velocity of f, $4\,v$ upwards.

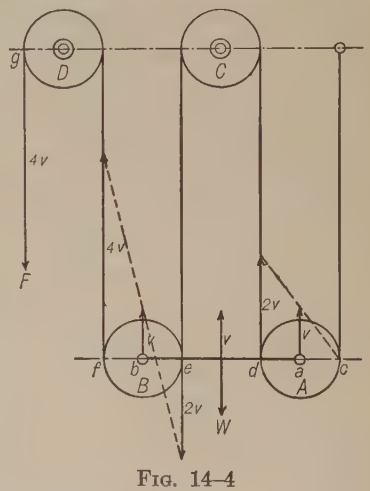

Fig. 14–4

Therefore

$$\frac{\text{Linear speed } F}{\text{Linear speed } W} = \frac{4}{1} = \frac{W}{F}$$

Many elevator-hoisting mechanisms are arranged in a similar manner, the force being applied at W, and the resulting force being given at F. This means a large force acting through a relatively small distance, producing a relatively small force acting through a much greater distance.

The *mechanical advantage* of a hoist is the ratio of the weight which can be lifted to the force which is exerted, friction being neglected.

The mechanical advantage of a given hoist can be determined by finding the velocity ratio as above and then, since the distances moved through in a given time (assuming constant velocity ratio) are directly as the velocities, the forces must be inversely as the velocities. Other methods of determining the mechanical advantage are illustrated by the following examples.*

Example 1. *Hoist with Two Single Sheave Blocks.* In Fig. 14–5 the upper block A, known as the standing block, is suspended from a fixed support. The rope is made fast to the casing of the upper block, passes around the sheave in the lower block and up around the sheave P which turns about the axis S in the upper block. It is required to find the force at F necessary to raise a weight W of 100 lb suspended from the lower block.

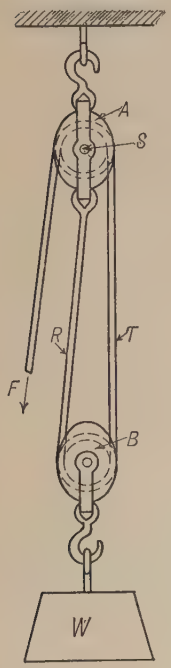

Fig. 14–5

Solution. Assume that W is lifted 1 ft by some external force with the rope at F not moving. Then 1 ft of slack rope would result at R and another foot of slack at T, giving a total of 2 ft of slack which must be drawn over to F in order to keep the rope tight. Therefore, the linear speed of F is to the linear speed of W as 2 is to 1. Hence F is to W as 1 is to 2, or $F = \frac{1}{2} W = 50$ lb.

Example 2. *Hoist with One Single Block and One Double Block.* The hoist shown in Fig. 14–6 has the part of the rope which is marked T made fast to the lower block; it then passes over a sheave in the upper block, comes down at R and passes under the sheave in the lower block, then up at P over a second sheave in the upper block and off at F.

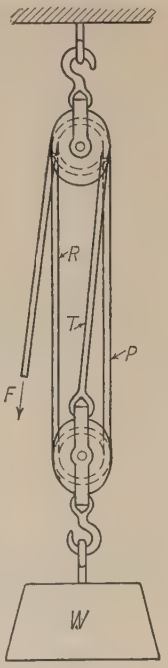

Fig. 14–6

It is required to find the mechanical advantage of this hoist; that is, the ratio of the weight W to the force at F.

Solution. Applying the same method used in Example 1 shows 1 ft of slack in each of the three parts R, T, and P, or a total of 3 ft which must be drawn off at F if W is lifted 1 ft by an external force. Therefore

$$\frac{W}{F} = \frac{3}{1}$$

* These solutions assume that the ropes are parallel.

Example 3. *"Luff on Luff."* Fig. 14–7 shows a combination of two sets of pulley blocks, the rope F of the first set being made fast to the moving block of the second set.

Solution. The mechanical advantage of each set is found as in the previous examples. Then the product of the two is the mechanical advantage of the combination. The first set in this case has a mechanical advantage of 3, and the second set, of 4; therefore the combination has a mechanical advantage of 12. If the hook H were attached to a stationary support and the load applied to the hook K, the advantage of the system would be 16.

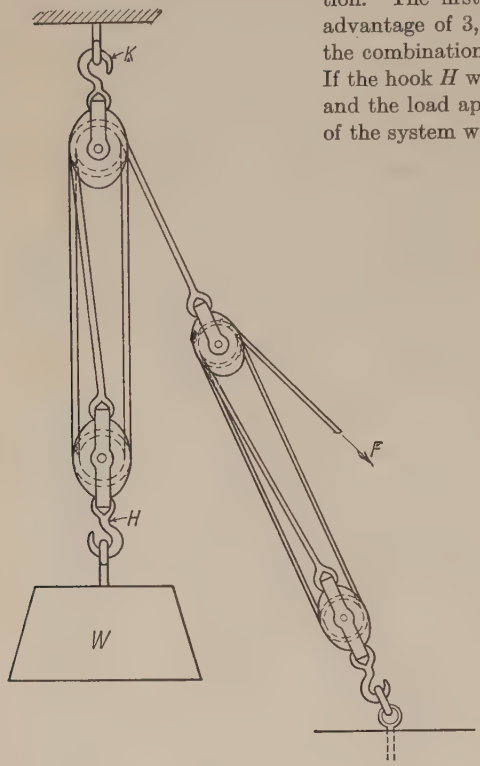

Fig. 14–7

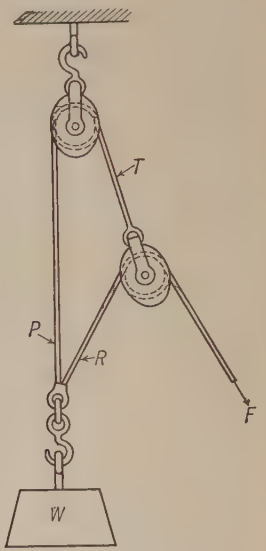

Fig. 14–8

Example 4. *Spanish Burton.* If the weight W (Fig. 14–8) is lifted 1 ft, a foot of slack is caused at both P and R. The foot at P is carried over to T which, in turn, causes a foot of slack in both R and F; this makes a total of 2 ft of slack in R which must be drawn over to F in addition to the 1 ft already given to F from T. Therefore, 3 ft must be taken up at F for every foot that W is lifted. Then the mechanical advantage is 3.

14–4. Weston Differential Pulley Block. Fig. 14–9 shows a chain hoist known as the Weston differential pulley block. The two upper sheaves A and B are fast to each other. The diameter of A is a little larger than the diameter of B and it is the ratio of these two diameters which governs the mechanical advantage.

The diameter of the lower sheave C is usually a mean between the

diameters of the upper ones in order that the supporting chain may hang vertically. This feature is not of great importance, and the diameter of the lower sheave has no effect on the mechanical advantage.

The chain is endless, passing over A, down at R, under C, up at P, around B, and hanging loose. The lifting force is applied at F. The sheaves are so shaped that the links of the chain fit into spaces provided for them to prevent slipping.

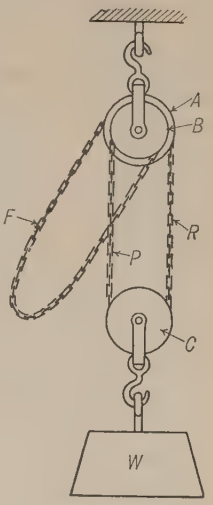

Fig. 14–9

The operation of the hoist may be seen from the following:

Let D_a represent the pitch diameter of the sheave A, D_b the pitch diameter of the sheave B. Assume that the chain is drawn down at F fast enough to cause A to make one complete turn in a unit of time; that is, F has a speed of πD_a linear units. This would give an upward speed to the chain at R of πD_a linear units. Then, if B were not turning, the sheave C would roll up on P, its center rising at a speed equal to one-half the speed of the chain at R; that is, the center of the lower sheave, and therefore the weight W, would rise at a speed of $\frac{\pi D_a}{2}$ linear units. But at the same time that R is rolling C up on P the pulley B is turning at the same angular speed as A, and therefore paying out chain at P at the rate of πD_b linear units per unit of time. This causes C to roll down on R at a speed such that its center is lowered at a speed of $\frac{\pi D_b}{2}$ linear units. The resultant upward speed of the center of C is, therefore,

$$\frac{\pi D_a}{2} - \frac{\pi D_b}{2} = \frac{\pi(D_a - D_b)}{2}$$

Since the speed of F is πD_a the ratio of the speed of F to that of W is

$$\frac{\pi D_a}{\frac{\pi(D_a - D_b)}{2}} = \frac{2\,D_a}{D_a - D_b}$$

The speed ratio may be found graphically as shown in Fig. 14–10.

From E lay off along the chain a distance V representing the velocity of E. Draw a line (shown dotted) from the end of this distance, to the center of the sheave. The length V_1 intercepted on the line of the chain through E_1 is the velocity of E_1. Draw V_1 downward at the left-

hand side of the lower sheave and V upward at the right-hand side of the same sheave. Join the ends of these two lines as shown, getting V_4, the resultant velocity of M. The figure also shows, at V_2 and V_3, the effects of V and V_1 respectively, when assumed to act successively.

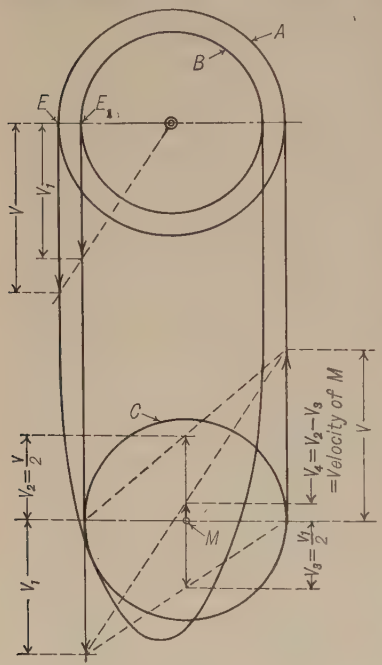

Fig. 14–10

14–5. Parallel Motion by Cords. Cords, wire ropes, or small wires are frequently used to compel long narrow pieces into parallel positions. Fig. 14–11 shows one such arrangement often used to guide a straightedge on a drafting board. On the under side of the blade R, in suitable recesses, are the four wheels, H, F, E, and G. The cord is attached to the board at D, passes around F and E on the blade, next around the wheels B and A on the board, then around H and G on the blade, and is attached to the board at C. A turnbuckle at T adjusts the tension in the cord. When the cord is clamped to the board at S the blade may be moved up or down, and it will remain parallel to its original position. The direction of the blade is adjusted by loosening the clamp S and turning the blade with the fingers. Usually the wheels H and F are on the same axis, as are also E and G, and overhang the edges of the board, and the cord crosses on the top surface of the blade.

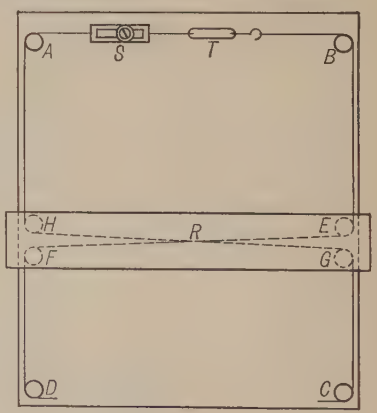

Fig. 14–11

This is only one of several different ways of arranging the pulleys and cord, and perhaps not the best method, but it well illustrates the principle involved.

14–6. The Swash Plate. The apparatus shown in Fig. 14–12, known as a swash plate, is in reality a cylindrical cam. It consists of an elliptical plate A set obliquely upon the

shaft S, by its rotation causing a sliding bar C to move up and down, in a line parallel to the axis of the shaft, in the guides D, the friction between the end of the bar and the plate being lessened by a small roller O. When a roller is used, the motion of the bar C is approximately harmonic — the smaller the roller the closer the approximation. If a point is used in place of the roller, the motion is harmonic, which can be shown as follows.

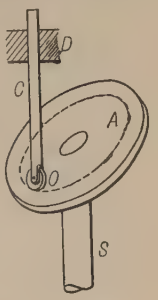

FIG. 14–12

Since the bar C remains always parallel to the axis of the shaft, the path of the point O, projected upon an imaginary plane through the lowest position of O and perpendicular to the shaft S, will be a circle, and the actual path of O on the plate A will be an ellipse.

In Fig. 14–13 let *eba* represent the angular inclination of the plate to the axis of the shaft, *ab* the axis of the shaft, *eof* the actual path of the point *o* on the plate, and the dotted circle *erd* the projection of this path upon a plane through *e* (the lowest position of *o*) perpendicular to the axis *ab*.

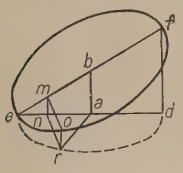

FIG. 14–13

Draw *om* perpendicular to *ef*, *or* perpendicular to the plane *erd*, and *rn* perpendicular to *ed*, the diameter of the circle *erd*. Join *mn*, and suppose the plate to rotate through an angle $ear = \theta$, and thus to carry the point *o* through a vertical distance equal to *or*.

Then

$$or = mn = ab \times \frac{en}{ea} \quad \left(\text{as } \frac{mn}{ab} = \frac{en}{ea}\right)$$

$$= ab \left(\frac{ea - an}{ea}\right)$$

$$= ab \left(\frac{1 - an}{ea}\right)$$

$$= ab \ (1 - \cos \theta)$$

or the same formula as was derived for harmonic motion. In this case *ab* represents the length of the equivalent crank, and is equal in length to one-half of the stroke of the rod C.

14–7. Intermittent Motion from Reciprocating Motion. A reciprocating motion in one piece may cause an intermittent circular or rectilinear motion in another piece. It may be arranged that one-half of the reciprocating movement is suppressed and that the other half always produces motion in the same direction, giving the *ratchet wheel*;

or the reciprocating piece may act on opposite sides of a toothed wheel alternately, and allow the teeth to pass one at a time for each half reciprocation, giving the different forms of *escapements* as applied in timepieces.

14–8. Ratchet Wheel. A wheel, provided with suitably shaped pins or teeth, receiving an intermittent circular motion from some vibrating or reciprocating piece, is called a *ratchet wheel.*

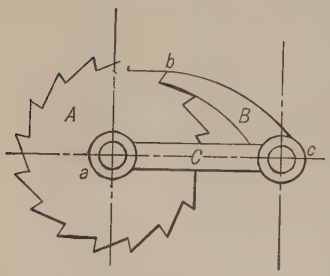

Fig. 14–14

In Fig. 14–14, A represents the ratchet wheel turning upon the shaft a; C is an oscillating lever carrying the *detent, click,* or *catch* B, which acts on the teeth of the wheel. The whole forms the three-bar linkage acb. When the arm C moves left handed, the *click* B will push the wheel A before it through a space dependent upon the motion of C. When the arm moves back, the *click* will slide over the points of the teeth, and will be ready to push the wheel on its forward motion as before; in any case, the *click* is held against the wheel either by its weight or the action of a spring. In order that the arm C may produce motion in the wheel A, its oscillation must be at least sufficient to cause the wheel to advance one tooth.

If, as often happens, the wheel A must be prevented from moving backward on the return of the click B, a fixed *pawl, click,* or *detent,* similar to B, turning on a fixed pin, is arranged to bear on the wheel, being held in place by its weight or a spring. Fig. 14–14 might be taken to represent a retaining pawl, and then ac is a fixed link and the click B would prevent any right-handed motion of the wheel A. Fig. 14–15 shows a retaining pawl which would prevent rotation of the wheel A in either direction; such pawls are often used to retain pieces in definite adjusted positions.

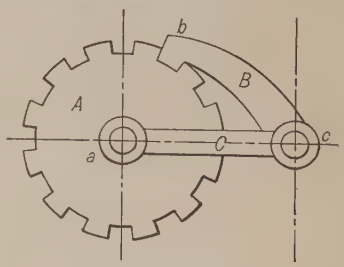

Fig. 14–15

If the diameter of the wheel A (Fig. 14–14) be increased indefinitely, it will become a rack which would then receive an intermittent translation on the vibration of the arm C; a retaining pawl might be required also to prevent a backward motion of the rack.

A click may be arranged to push, as in Fig. 14–14, or to pull, as in Fig. 14–21. In order that a click or pawl may retain its hold on the

tooth of a ratchet wheel, the common normal to the acting surfaces of the click and tooth, or pawl and tooth, must pass *inside* of the axis of a pushing click or pawl, as shown on the lowest click, Fig. 14–16, and *outside* the axis of the pulling click or pawl; the normal might pass through the axis, but the pawl would be more securely held if the normal is located according to the above rule, which also secures the easy falling of the pawl over the points of the teeth. It is sometimes necessary, or more convenient, to place the click-actuating lever on an axis different from that of the ratchet wheel; then care must be taken that in all positions of the click the common normal occupies the proper position; it will generally be sufficient to consider only the extreme positions of the pawl in any case. Since, when the lever vibrates on the axis of the wheel, the common normal always makes the same angle with it in all positions, thus securing a good bearing of the pawl on the tooth, it is best to use this construction when practicable.

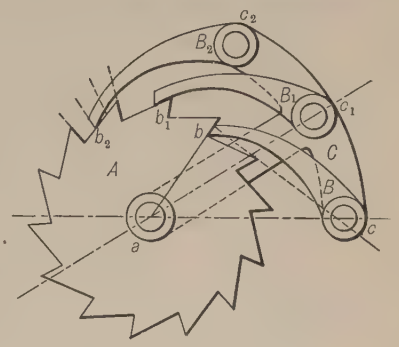

FIG. 14–16

The effective stroke of a click or pawl is the space through which the ratchet wheel is driven for each forward stroke of the arm. The total stroke of the arm should exceed the effective stroke by an amount sufficient to allow the click to fall freely into place.

A common example of the application of the click and ratchet wheel may be seen in several forms of ratchet drills used to drill metals by hand. As examples of the retaining pawl and wheel we have capstans and windlasses, where it is applied to prevent the recoil of the drum or barrel, for which purpose it is also applied in clocks.

It is sometimes desirable to hold a drum at shorter intervals than would correspond to the movement of one tooth of the ratchet wheel; several equal pawls may be used. Fig. 14–16 shows three pawls, attached by pins c, c_1, c_2 to the fixed piece C, and so proportioned that they come into action alternately. Thus, when the wheel A has moved an amount corresponding to one-third of a tooth, the pawl B_1 will be in contact with the tooth b_1; after the next one-third movement, B_2 will be in contact with b_2; then after the remaining one-third movement, B will come into contact with the tooth after b; and so on. This arrangement enables us to obtain a slight motion and at the same time use comparatively large and strong teeth on the wheel in place of small

weak ones. The piece C might also be used as a driving arm, and the wheel could then be moved through a space less than that of a tooth. The three pawls might be made of different lengths and placed side by side on one pin, as c_1, in which case a wide wheel would be necessary: the number of pawls required would be fixed by the conditions.

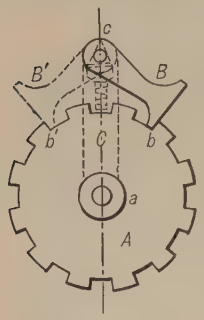

FIG. 14–17

14–9. Reversible Click or Pawl. The usual form of the teeth of a ratchet wheel is that given in Fig. 14–16, which admits of motion in only one direction; but in *feed mechanisms*, such as those on shapers and planers, it is often necessary to utilize a click and ratchet wheel that will drive in either direction. Such an arrangement is shown in Fig. 14–17, where the wheel A has radial teeth, and the click, which is made symmetrical, can occupy either of the positions B or B', thus giving to A a right- or a left-handed motion. In order that the click B may be held firmly against the ratchet wheel A in all positions of the arm C, its pivot c, after passing through the arm, is provided with a small triangular piece (shown dotted); this piece turning with B has a flat-ended presser, always urged upward by a spring (also shown dotted) bearing against the lower angle opposite B, thus urging the click toward the wheel; a similar action takes place when the click is in the dotted position B'. When the click is placed in line with the arm C, it is held in position by the side of the triangle parallel to the face of the click; thus this simple contrivance serves to hold the click so as to drive in either direction, and also to retain it in position when thrown out of gear.

Since for different classes of work a change in the " feed " is desired, the arrangement must be such that the motion of the ratchet wheel A (Fig. 14–17), which produces the feed, can be adjusted. This is often done by changing the swing of the arm C, which is usually actuated by a rod attached at its free end. The other end of the rod is attached to a vibrating lever which has a definite angular movement at the proper time for the feed to occur, and is provided with a T-slot in which the pivot for the rod can be adjusted by means of a thumb screw and nut. By varying the distance of the nut from the center of motion of the lever, the swing of the arm C can be regulated; to reverse the feed, it occurring in the same position as before, the click must be reversed and the nut moved to the other side of the center of swing of the lever.

Figs. 14–18 and 14–19 show other methods of adjusting the motion of the ratchet wheel. In Fig. 14–18, which shows a form of feed mecha-

nism used by Sir J. Whitworth in his planing machine, C is an arm carrying the click B, and swinging loosely on the shaft a fixed to the ratchet wheel A. The wheel E, also turning loosely on the shaft a, and placed just behind the arm C, has a definite angular motion sufficient to produce the coarest feed desired; its concentric slot m is provided with two adjustable pins ee, held in place by nuts at their back ends, and enclosing the lever C, but not of sufficient length to reach the click B. When the pins are placed at the ends of the slot, no motion will occur in the arm C; but when e and e are placed as near as possible to each other, confining the arm C between them, all the motion of E will be given to the arm C, thus producing the greatest feed; any other positions of the pins will give motions between the above limits, and the adjustment may be made to suit each case.

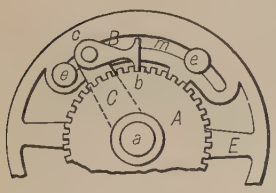

FIG. 14–18

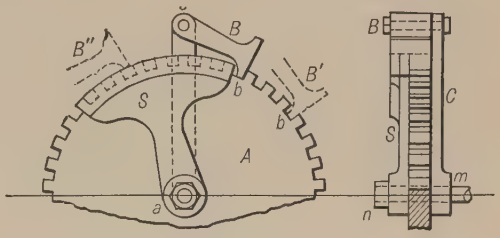

FIG. 14–19

In Fig. 14–19, the stationary shaft a, made fast to the frame of the machine at m, carries the vibrating arm C, ratchet wheel A, and adjustable shield S; the two former turn loosely on the shaft, while the latter is made fast to it by means of a nut n, the hole in S being made smaller than that in A, to provide a shoulder against which S is held by the nut. The arm C carries a pawl B of a thickness equal to that of the wheel plus that of the shield S; the extreme positions of this pawl are shown by dotted lines at B' and B''. The teeth of the wheel A may be made of such shape as to gear with another wheel operating the feed mechanism; or another wheel, gearing with the feed mechanism, might be made fast to the back of A, if more convenient, and then the arm C would be placed back of this second wheel.

If we suppose the lever in its extreme left position, the click will be at B'' resting upon the face of the shield S, which projects beyond the points of the teeth of A; and in the right-handed motion of the lever the click will be carried by the shield S until it reaches the position B, where it will leave the shield and come in contact with the tooth b, which it will push to b' in the remainder of the swing. In the backward swing of the lever the click will be drawn over the teeth of the wheel and face of

the shield to the position B''. In the position of the shield shown in the figure a feed corresponding to three teeth of the wheel A is produced; by turning the shield to the left one, two, or three teeth, a feed of four, five, or six teeth might be obtained; by turning it to the right, the feed

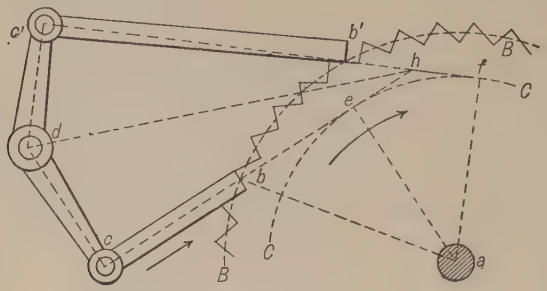

Fig. 14–20

could be diminished, the shield S being usually made large enough to consume the entire swing of the arm C. This form of feed mechanism has often been used in slotting machines, where, as well as in Figs. 14–18 and 14–19, the click is usually held to its work by gravity.

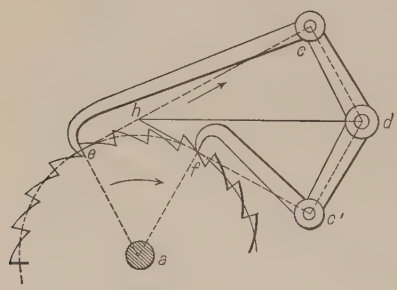

Fig. 14–21

14–10. Double-Acting Click. This device consists of two clicks making alternate strokes, so as to produce a nearly continuous motion of the ratchet wheel which they drive, that motion being intermittent only at the instant of reversal of the movement of the clicks. In Fig. 14–20 the clicks act by pushing, and in Fig. 14–21 by pulling; the former arrangement is generally best adapted where much strength is required, as in windlasses.

Each single stroke of the click-arms cdc' (Fig. 14–20) advances the ratchet wheel through one-half of its pitch or some multiple of its half-pitch. To make this evident, suppose that the double click is to advance the ratchet wheel one tooth for each double stroke of the click arms, the arms being shown in their mid-stroke position in the figure. Now when the click bc is beginning its forward stroke, the click $b'c'$ has just completed its forward stroke and is beginning its backward stroke; during the forward stroke of bc the ratchet wheel will be advanced one-half a tooth; the click $b'c'$, being at the same time drawn back one-half a tooth, will fall into position ready to drive its tooth in the remain-

ing single stroke of the click arms, which are made equal in length. By the same reasoning it may be seen that the wheel can be moved ahead some whole number of teeth for each double stroke of the click arms.

In Fig. 14–20 let the axis a and dimensions of the ratchet wheel be given, also its pitch circle BB, which is located halfway between the tips and roots of the teeth. Draw any convenient radius ab, and from it lay off the angle bae equal to the mean obliquity of action of the clicks, that is, the angle that the lines of action of the clicks at mid stroke are to make with the tangent to the pitch circle through the points of action. On ae let fall the perpendicular be, and with the radius ae describe the circle CC: this is the *base circle*, to which the lines of action of the clicks should be tangent. Lay off the angle eaf equal to *an odd number of times the half-pitch angle*, and through the points e and f, on the base circle, draw two tangents cutting each other at h. Draw hd bisecting the angle at h, and choose any convenient point in it, as d, for the center of the rocking shaft, to carry the click arms. From d let fall the perpendiculars dc and dc' on the tangents hec and fhc' respectively; then c and c' will be the positions of the click pins, and dc and dc' the center lines of the click arms at mid stroke. Let b and b' be the points where ce and $c'f$ cut the pitch circle; then cb and $c'b'$ will be the lengths of the clicks. The *effective stroke* of each click will be equal to half the pitch as measured on the base circle CC (or some whole number of times this half-pitch), and the total stroke must be enough greater to make the clicks clear the teeth and drop well into place.

In Fig. 14–21 the clicks pull instead of push, the obliquity of action is zero, and the base circle and pitch circle become one, the points b, e, and b', f (Fig. 14–20) becoming e and f (Fig. 14–21). In all other respects the construction is the same as when the clicks act by pushing, and the different points are lettered the same as in Fig. 14–20.

Since springs are likely to lose their elasticity or become broken after being in use some time, it is often desirable to get along without applying them to keep clicks in position. Fig. 14–22 shows in elevation a mechanism where no springs are required to keep the clicks in place, it being used in some forms of lawn-mowers to connect the wheels to the revolving cutter when the mower is pushed forward, and to allow a free backward motion of the mower while the cutter still revolves. The ratchet A is usually made on the inside of the wheels carrying the mower, and the piece C, turning on the same axis as A, carries the three equidistant pawls or clicks B, shaped to move in the cavities provided for them. In any position of C, at least one of the clicks will be held in contact with A by the action of gravity, and any motion of A in the

direction of the arrow will be given to the piece C. Here the ratchet wheel drives the click, ac being the actuated click lever. The piece C is sometimes the driver; then any left-handed motion of C will be given to A, while the right-handed motion will simply cause the clicks to slide over the teeth of A. The clicks B are usually held in place by a cap attached to C.

Fig. 14–23 shows a form of click which is always thrown into action when a left-handed rotation is given to its arm C, while any motion of the wheel A left handed will immediately throw the click out of action.

Fig. 14–22

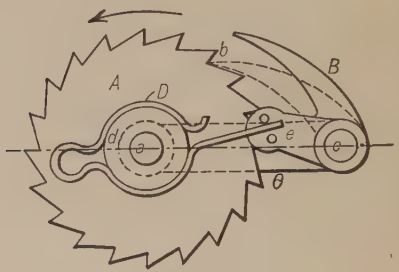

Fig. 14–23

The wheel A carries a projecting hub d, over which a spring D is fitted so as to move with slight friction. One end of this spring passes between two pins, e, placed upon an arm attached to the click B. When the arm C is turned left handed, the wheel A and the spring D being stationary, the click B will be thrown toward the wheel by the action of the spring on the pin e. The motion of the wheel A will be equal to that of the arm C, minus the motion of C necessary to throw the click into gear. Similarly, when A turns left-handed, the click B is thrown out of gear. This mechanism is employed in some forms of spinning-mules to actuate the spindles when winding on the spun yarn.

Fig. 14–24 shows a friction catch B working in a V-shaped groove in the wheel A, as shown in section $A'B'$. Here B acts as a retaining click, and prevents any right-handed motion of A; its face is circular in outline, the center being located at d, a little above the axis c. A similarly shaped catch might be used in place of an actuating click to cause motion of A.

14–11. Friction catch. Various forms of catches depending upon friction are often used in place of clicks; these catches usually act upon the face of the wheel or in a suitably formed groove cut in the face. Friction catches have the advantage of being noiseless and allowing any motion of the wheel, as they can take hold at any point; they have the

disadvantage, however, of slipping when worn, and of getting out of order.

Fig. 14–25 shows four catches like B (Fig. 14–24) applied to drive an annular ring A in the direction indicated by the arrow. When the piece c is turned right handed, the catches B are thrown against the inside b of the annular ring by means of the four springs shown; on stopping the motion of c, the pieces B are pushed, by the action of b,

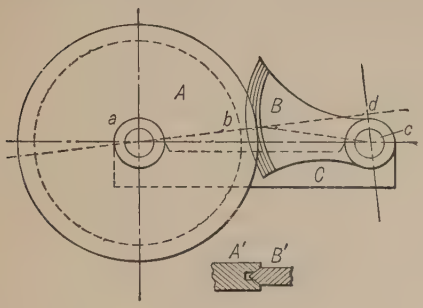

Fig. 14–24

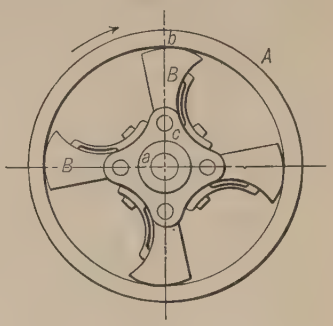

Fig. 14–25

toward the springs which slightly press them against the ring and hold them in readiness to again grip when c moves right handed. Thus an oscillation of the piece c might cause continuous rotation of the wheel A, provided a flywheel were applied to A to keep it going while c was being moved back. The annular ring A is fast to a disk carried by the shaft a; the piece c turning loosely on a has a collar to keep it in position lengthwise of the shaft.

The nipping lever shown in Fig. 14–26 is another application of the friction catch. A loose ring surrounds the wheel A; a friction catch B having a hollow face works in a pocket in the ring and is pivoted at c. On applying a force at the end of the catch B in the direction of the arrow, the hollow face of the catch will " nip " the wheel at b, and cause the ring to bear tightly against the left-hand part of the circumference of the wheel; the friction thus set up will cause the catch, ring, and wheel to move together as one piece. The greater the pull applied at the end of the catch the greater will be the friction, as the friction is proportional to the pressure; thus the amount of friction developed will depend upon the resistance to motion of A. Upon reversing the force at the end of the catch, the hollow face of the catch will be drawn away from the face of A, and the rounding top part of the catch, coming in contact with the top of the cavity in the ring, will cause the ring to slide back upon the disk. An upward motion of

the click end will again cause the wheel A to move forward, and thus the action is the same as in a ratchet and wheel.

Fig. 14–27 shows, in section, a device which has been applied to actuate sewing machines in place of the common crank. Two such mechanisms were used, one to rotate the shaft of the machine on a downward tip of the treadle, while the other acted during the upward tip, the treadle rods being attached to the projections of the pieces B. The mechanism shown in the figure acts upon the shaft during the downward motion of the projection B as shown by the arrow.

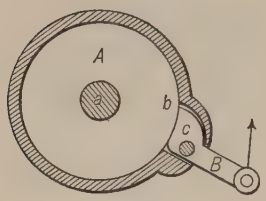

Fig. 14–26

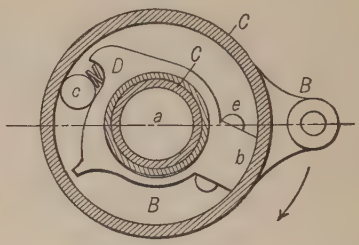

Fig. 14–27

The piece C, containing an annular groove, is made fast to the shaft a, the sides of this groove being turned circular and concentric with the shaft. The piece B, having a projecting hub fitting loosely on the inner surface of the groove in C, is placed over the open groove, and is held in place by a collar on the shaft. The hub on the piece B, and the piece C, are shown in section. The friction catch D, working in the groove, is fitted over the hub of B, the hole in D being elongated in the direction ab so that D can move slightly upon the hub and between the two pins e fast in the piece B. A cylindrical roller c is placed in the wedge-shaped space between the outer side of the groove and the piece D, a spring always actuating this roller in a direction opposite to that of the arrow, or towards the narrower part of the space.

Now when the piece B is turned in the direction of the arrow by a downward stroke of the treadle rod, it will move the piece D with it by means of the pins e; at the same time the roller c will move into the narrow part of the wedge-shaped space between C and D, and cause binding between the pieces D and C at b and at the surface of the roller. The friction at b thus set up will cause the motion of D to be given to C. On the upward motion of the projection B the roller will be moved to the large part of its space by the action of the piece C revolving with the shaft combined with that of the backward movement of D, thus releasing the pressure at b and allowing C to move freely onward.

The other catch would be made just the reverse of this one, and would act on an upward movement of the treadle rod.

Another form of friction catch, sometimes used in gang saws to secure the advance of the timber for each stroke of the saw, and called the *silent feed*, is shown in Fig. 14–28.

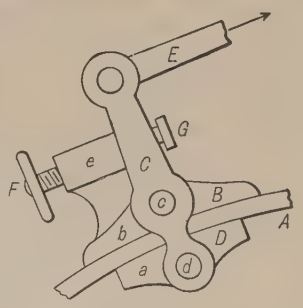

Fig. 14–28

The saddle block B, which rests upon the outer rim of the annular wheel A, carries the lever C turning upon the pin c. The block D, which fits the inner rim of the wheel, is carried by the lever C, and is securely held to its lower end by the pin d on which D can freely turn. When the pieces occupy the positions shown in the figure, a small space exists between the piece D and the inside of the rim A.

The upper end of the lever C has a reciprocating motion imparted to it by means of the rod E. The oscillation of the lever about the pin c is limited by the stops e and G carried by the saddle block B. When the rod E is moved in the direction indicated by the arrow, the lever turning on c will cause the block D to approach B, and thus nip the rim at a and b; and any further motion of C will be given to the wheel A. On moving E in the opposite direction the grip will first be loosened, and the lever striking against the stop e will cause the combination to slide freely back on the rim A. The amount of movement given to the wheel can be regulated by changing the stroke of the rod E by an arrangement similar to that described in connection with the reversible click, § 14–9. The stop G can be adjusted by means of the screw F so as to prevent the oscillation of the lever upon its center c, thus throwing the grip out of action. The saddle block B then merely slides back and forth on the rim, the action being the same as that obtained by throwing the ordinary click out of gear.

14–12. Masked Wheels. It is sometimes required that certain strokes of the click-actuating lever shall remain inoperative upon the ratchet wheel. Such arrangements are made use of in numbering machines where it is desired to print the same number twice in succession; they are called *masked wheels*.

Fig. 14–29, taken from a model, illustrates the action of a masked wheel; the pin wheel D represents the first ratchet wheel, and is fast to the axis a; the second wheel A has its teeth arranged in pairs, every alternate tooth being cut deeper, and it turns loosely on the axis a. The click B is so made that one of its acting surfaces, i, bears against the pins e of the wheel D, while the other, g, is placed so as to clear the

pins and yet bear upon the teeth of A, the wheel A being located so as to admit of this.

If now we suppose the lever C to vibrate through an angle sufficient to move either wheel along one tooth, both having the same number, it will be noticed that when the projecting piece g is resting in a shallow tooth of the wheel A, the acting surface i will be retained too far from the axis to act upon the tooth e, and thus this vibration of the lever will have no effect upon the pin wheel D; while when the piece g rests in a deep tooth, as b', the click will be allowed to drop so as to bring the surface i into action with the pin e'.

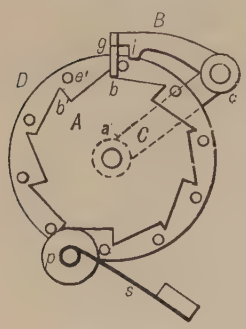

Fig. 14–29

In the figure the click B has just pushed the tooth e' into its present position, the projection g having rested in the deep tooth b' of the wheel A; on moving back, g has slipped into the shallow tooth b, and thus the next stroke of the lever and click will remain inoperative on the wheel D, which advances but one tooth for every two complete oscillations of the lever C.

Both wheels should be provided with retaining pawls, one of which, p, is shown. This form of pawl, consisting of a roller p turning about a pivot carried by the spring s, attached to the frame carrying the mechanism, is often used in connection with pin wheels, as by rolling between the teeth it always retains them in the same position relative to the axis of the roller; a triangular-pointed pawl which also passes between the pins is sometimes substituted for the roller.

The pins of the wheel D might be replaced by teeth so made that their points would be just inside of the bottoms of the shallow teeth of A. A wide pawl would then be used; when it rested in a shallow tooth of A it would remain inoperative on D, and when it rested in a deep tooth it would come in contact with the adjacent tooth of D and push it along.

So long as the click B and the wheels have the proper relative motion it makes no difference which we consider as fixed, as the action will be the same whether we consider the axis of the wheels as fixed and the click to move, or the click to be fixed and the axis to have the proper relative motion in regard to it. The latter method is made use of in some forms of numbering machines.

14–13. Counter Mechanism. Fig. 14–30 shows the mechanism of a "counter" used to record the number of double strokes made by a pump; the revolutions made by a steam engine, paddle, propeller, or other shaft, etc. Two views are given in the figure, which represents a counter capable of recording revolutions from 1 to 999; if it is desired

to record higher numbers, it will only be necessary to add more wheels, such as A. A plate, having a long slot or series of openings opposite the figures 000, is placed over the wheels, thus allowing the numbers to be visible only as they come under the slot or openings.

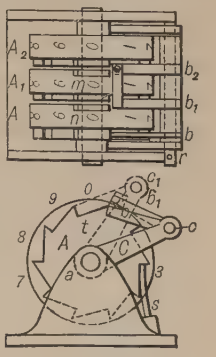

FIG. 14–30

The number wheels A, A_1, A_2 are arranged to turn loosely side by side upon the small shaft a, and are provided with a series of ten teeth cut into one side of their faces, while upon the other side a single notch is cut opposite the zero tooth on the first side, it having the same depth and contour. This single notch can be omitted on the last wheel A_2. The numbers 0, 1, 2, 3, 4, 5, 6, 7, 8, 9 are printed upon the faces of the wheels in proper relative positions to the teeth t.

Two arms C are arranged to vibrate upon the shaft a of the number wheels, and carry at their outer ends the pin c, on which a series of clicks, b, b_1, and b_2, are arranged, collars placed between them serving to keep them in position on the pin. The arms are made to vibrate through an angle sufficient to advance the wheels one tooth, i.e., one-tenth of a turn; their position after advancing a tooth is shown by dotted lines in the side view. A common method of obtaining this vibration is to attach a rod at r, one end of the pin c, this rod to be so attached at its other end to the machine as to cause the required backward and forward vibrations of the lever C for each double stroke or revolution that the counter is to record.

The click b is narrow, and works upon the toothed edge of the first wheel A, advancing it one tooth for every double stroke of the arm c. The remaining clicks b_1 and b_2 are made broad, and work on the toothed edges of A_1 and A_2, as well as on the notched rims of A and A_1, respectively. When the notches n and m come under the clicks b_1 and b_2 the clicks will be allowed to fall and act on the toothed parts of A_1 and A_2; but in any other positions of the notches the clicks will remain inoperative upon the wheel, simply riding upon the smooth rims of A and A_1, which keep the clicks out of action. Each wheel is provided with a retaining spring s to keep it in proper position.

The wheels having been placed in the position shown in the figure, the reading being 000, the action is as follows: The click b moves the wheel A along one tooth for each double stroke of the arm C, the clicks b_1 and b_2 remaining inoperative on A_1 and A_2; on the figure 9 reaching the slot, or the position now occupied by 0, the notch m will allow the click b_1 to fall into the tooth 1 of the wheel A_1, and the next forward

stroke of the arm will advance both the wheels A and A_1, giving the reading 10; the notch n having now moved along, the click b_1 will remain inoperative until the reading is 19, when b_1 will again come into action and advance A_1 one tooth, giving the reading 20; and so on up to 90, when the notch m comes under the click b_2. To prevent the click b_2 from acting on the next forward stroke of the arm, which would make the reading 101 instead of 91, as it should be, a small strip is fastened firmly to the end of the click b_2, its free end resting upon the click b_1. This strip prevents the click b_2 from acting until the click b_1 falls, which occurs when the reading is 99; on the next forward stroke the clicks b_1 and b_2 act, thus giving the reading 100. As the strip merely rests upon b_1, it cannot prevent its action at any time. If another wheel were added, its click would require a strip resting on the end of b_2. A substitute for these strips might be obtained by making the wheel A fast to the shaft a, and allowing the remaining wheels to turn loose upon it, thin disks, having the same contour as the notched edge of the wheel A, being placed between the wheels A_1A_2, A_2A_3, etc., and made fast to the shaft, the notches all being placed opposite n; thus the edges of the disks would keep the clicks b_2, b_3, etc., out of action, except when the figure 9 of the wheel A is opposite the slot, and the notches m, etc., are in proper position. A simpler form of counter will be described in § 14–14.

14–14. Intermittent Motion from Continuous Motion. The examples of intermittent motion thus far considered have been those in which a uniform reciprocating motion in one piece gives an intermittent circular or rectilinear motion to another, the click being the driver and the wheel the follower.

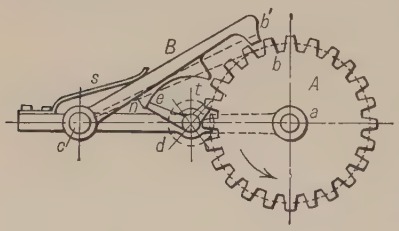

Fig. 14–31

It is often required that a uniform circular motion of the driver shall produce an intermittent circular or rectilinear motion of the follower. The following examples give some solutions of the problem:

Fig. 14–31 shows a combination by which the toothed wheel A is moved in the direction of the arrow, one tooth for every complete turn of the shaft d, the pawl B retaining the wheel in position when the tooth t on the shaft d is out of action. The stationary link adc forms the frame, and provides bearings for the shafts d and a, and a pin c for the pawl B. The arm e, placed by the side of the tooth upon the shaft, is arranged to clear the wheel A in its motion, and to lift the pawl B at the time when the tooth t comes into action with the wheel, and to drop the

pawl when the action of t ceases, i.e., when the wheel has been advanced one tooth. This is accomplished by attaching the piece n to the pawl, its contour in the raised position of the pawl being an arc of a circle about the center of the shaft d; its length is arranged to suit the above requirements. When the tooth t comes in contact with the wheel, the arm c, striking the piece n, raises the pawl (which is held in position by the spring s), and retains it in the raised position until the tooth t is ready to leave the wheel, when e, passing off from the end of n, allows the pawl to drop.

In Fig. 14–32 the wheel A makes one-third of a revolution for every turn of the wheel bc, its period of rest being about one-half the period of revolution of bc. If we suppose A the follower, and to turn right handed while the driver bc turns left handed, one of the round pins b is just about to push ahead the long tooth of A, the circular retaining sector c being in such a position as to follow a right-handed motion of A. The first pin slides down the long tooth, and the other pins pass into and gear with the teeth b', the last pin passing off on the long tooth e, when the sector c will come in contact with the arc c', and retain the wheel A until the wheel bc again reaches its present position.

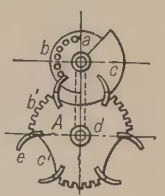

Fig. 14–32

Fig. 14–33 is a diagram of a mechanism known as a **Geneva wheel.** The wheel A makes one-sixth of a revolution for one turn of the driver ac, the pin b working in the slots b' causing the motion of A; the circular portion c of the driver, coming in contact with the corresponding circular hollows c', retains A in position when the tooth b is out of action. The wheel a is cut away just back of the pin b to provide clearance for the wheel A in its motion.

Fig. 14–33

The wheels may be so designed that the center line of the slot is tangent to the pin at the time the pin is first entering the slot, thus enabling the driver to start the follower with a minimum of shock. If one of the slots, as b', is closed up, it will be found that the shaft a can make only a little over five and one-half revolutions in either direction before the pin b strikes the closed slot. This mechanism, when so modified, has been applied to watches to prevent overwinding, and is called the *Geneva stop*, the wheel a being attached to the spring shaft so as to turn with it, while A turns on an axis d in the spring barrel. The number of slots in A depends upon the number of times it is desired to turn the spring shaft.

While A is in motion the mechanism is equivalent to the swinging-block linkage discussed in Chapter VI.

By placing another pin opposite b in the wheel ac, as shown by dotted lines, and providing the necessary clearance, the wheel A could be moved through one-sixth of a turn for every half turn of ac.

A simple type of counter extensively used on water meters is shown in Fig. 14–34. It consists of a series of wheels A, B, C, mounted side by side and turning loosely on the shaft S; or the first wheel to the right may be fast to the shaft and all the remaining wheels loose upon it. Each wheel is numbered on its face as in Fig. 14–30, and it is provided, as

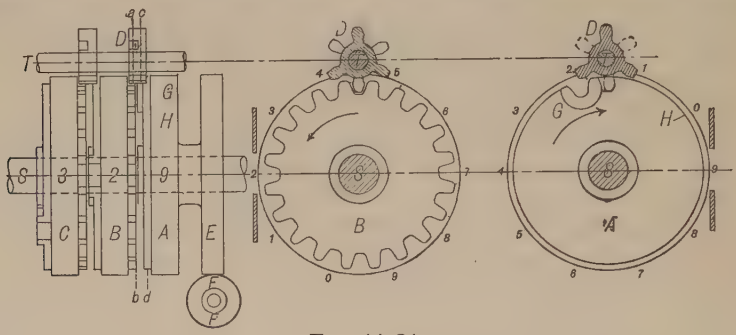

Fig. 14–34

shown, that the middle row of figures appears in a suitable slot in the face of the counter. The first wheel A is attached to the worm wheel E, having 20 teeth and driven by the worm F geared to turn twice for one turn of the counter driving shaft.

On a parallel shaft T loose pinions D are arranged between each pair of wheels. Each pinion is supplied with six teeth on its left side extending over a little more than one-half its face and with three teeth, each alternate tooth being cut away, for the remainder of the face, as clearly shown in the sectional elevations. The middle elevation (Fig. 14–34) shows a view of the wheel B from the right of the line ab with the pinion D sectioned on the line cd. The right elevation shows a view of the wheel A from the left of the line ab with the pinion D sectioned on the line cd. The first wheel A, and all others except the last, at the left, have on their left sides a double tooth G, which is arranged to come in contact with the six-tooth portion of the pinion; the space between these teeth is extended through the brass plate which forms the left side of the number ring whose periphery H acts as a stop for the three-tooth portion of the pinion, as clearly shown in the figure to the right. Similarly on the right side of each wheel, except the first, is placed a wheel of 20 teeth gearing with the six-tooth part of the pinion, as shown in the middle figure. When the digit 9 on any wheel, except the one at the left, comes under the slot, the double tooth G is ready to come in

contact with the pinion; as the digit 9 passes under the slot the tooth G starts the pinion, which is then free to make one-third of a turn and again become locked by the periphery H. Thus any wheel to the left receives one-tenth of a turn for every passage of the digit 9 on the wheel to its right. In the figure the reading 329 will change to 330 on the passing of the digit 9. The counter can be made to record oscillations by supplying its actuating shaft with a ten-tooth ratchet, arranged with a click to move one tooth for each double oscillation.

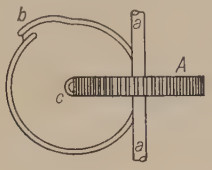

FIG. 14–35

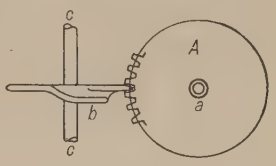

FIG. 14–36

Figs. 14–35 and 14–36 show two methods of advancing the wheels A through a space corresponding to one tooth during a small part of a revolution of the shafts c; in this case the shafts are at right angles to each other. In Fig. 14–35 a raised circular ring with a small spiral part b attached to a disk is made use of; the circular part of the ring retains the wheel in position, while the spiral part gives it its motion. In Fig. 14–36 the disk carried by the shaft cc has a part of its edge bent helically at b; this helical part gives motion to the wheel, and the remaining part of the disk edge retains the wheel in position. By using a regular spiral, in Fig. 14–35, and one turn of a helix, in Fig. 14–36, the wheels A could be made to move uniformly through the space of one tooth during a uniform revolution of the shafts c.

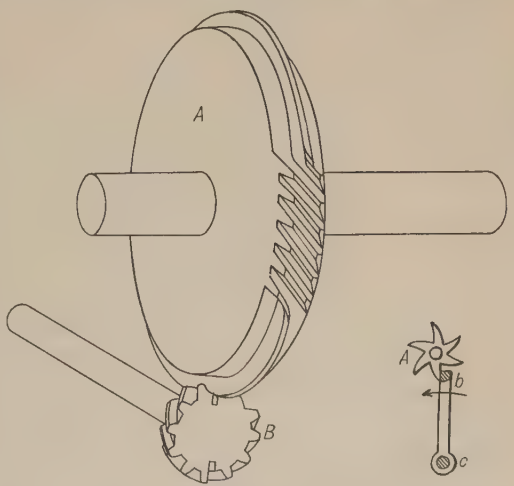

FIG. 14–37

FIG. 14–38

In Fig. 14–37 the wheel A is arranged to turn the wheel B, on a shaft at right angles to that of A, through one-half a turn while it turns one-sixth of a turn, and to lock B during the remaining five-sixths of the turn.

Fig. 14–38 illustrates the **star wheel.** The wheel A turns through a

space corresponding to one tooth for each revolution of the arm carrying the pin b and turning on the shaft c. The pin b is often stationary, and the star wheel is moved past it; the action is then evidently the same, as the pin and wheel have the same relative motion in regard to each other during the time of action. The star wheel is often used on moving parts of machines to actuate some feed mechanism, as may be seen in cylinder-boring machines on the facing attachment, and in spinning machinery.

14–15. Locking Devices. The principle of the slotted sliding bar combined with that of the Geneva stop is applied in the shipper mechanism shown in Fig. 14–39, often used on machines where the motion is automatically reversed. The shipper bar B slides in the piece CC, which also provides a pivot a for the weighted lever wab. The end of the lever b opposite the weight w carries a pin which works in the grooved lug s on the shipper bar. In the present position of the pieces, the pin b is in the upper part of the slot, and the weight w, tending to fall under the action of gravity, holds it there, the shipper being thus effectually locked in its present position. If now the lever be turned left handed about its axis a until the weight w is just a little to the left of a, gravity will carry the weight and lever into the dotted position shown, where it will be locked until the lever is turned right handed. The principle of using a weight to complete the motion is very convenient, as the part of the machine actuating the shipper often stops before the belt is carried to the wheel which produces the reverse motion, and the machine is thus stopped. The motion can always be made sufficient to raise a weighted lever, as shown above, and the weight will, in falling, complete the motion of the shipper.

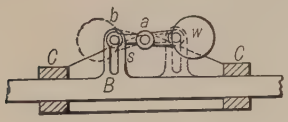

Fig. 14–39

The device shown in Fig. 14–40, of which there may be many forms, serves to retain a wheel A in definite adjusted positions, its use being the same as that of the retaining pawl shown in Fig. 14–15. The wheels B and A turn on the shafts c and a, respectively, carried by the link C, which is shown dotted, as it has been cut away in taking the section. Two positions of the wheel B will allow the teeth b of A to pass freely through its slotted opening, while any other position effectually locks the wheel A. The shape of the slot in B and the teeth of A are clearly shown in the figure.

Fig. 14–41 shows another device for locking the wheel A, the teeth of which are round pins; but it is necessary to turn B once to pass a tooth of A. If we suppose the wheel A under the influence of a spring which tends to turn it right handed, and then turn B uniformly either right

or left handed, the wheel A will advance one tooth for each complete turn of B, a pin first slipping into the groove on the left and leaving it when the groove opens toward the right, the next pin then coming against the circular part of B opposite the groove. It will be noticed that, although there are only six pins on the wheel A, yet there are twelve po-

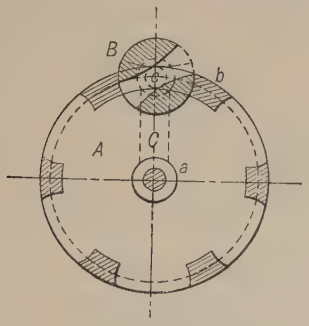

FIG. 14–40

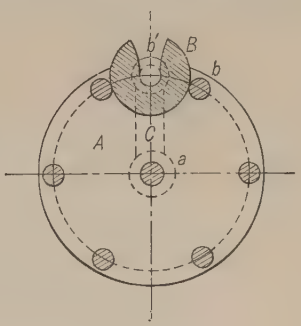

FIG. 14–41

sitions in which A can be locked, as a tooth may be in the bottom of the groove or two teeth may be bearing against the circular outside of B. Devices similar in principle to those shown in Figs. 14–40 and 14–41 are often used to adjust stops in connection with feed mechanisms.

Clicks and pawls as used in practise may have many different forms and arrangements; their shape depends very much upon their strength and the space in which they are to be placed, and the arrangement depends on the requirements.

14–16. Escapements. An escapement is a combination in which a toothed wheel acts upon two distinct pieces or *pallets* attached to a reciprocating frame, it being so arranged that when one tooth escapes or ceases to drive its pallet, another tooth shall begin its action on the other pallet.

A simple form of escapement is shown in Fig. 14–42. The frame cc' is arranged to slide longitudinally in the bearings CC, which are attached to the bearing for the toothed wheel. The wheel a turns continually in the direction of the arrow, and is provided with three teeth, b, b', b'', the frame having two pallets, c and c'. In the position shown, the tooth b is just ceasing to drive the pallet c to the right, and is *escaping*, while the tooth b' is just coming in contact with the pallet c', when it will drive the frame to the left.

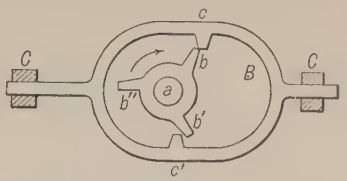

FIG. 14–42

Although escapements are generally used to convert circular into re-

ciprocating motion, as in the above example, the wheel being the driver, yet, frequently, the action may be reversed. In Fig. 14–42, if we consider the frame to have a reciprocating motion and use it as the driver, the wheel will be made to turn in the opposite direction to that in which it would itself turn to produce reciprocating motion in the frame. It will be noticed also that there is a short interval at the beginning of each stroke of the frame in which no motion will be given to the wheel. It is clear that the wheel a must have 1, 3, 5, or some odd number of teeth upon its circumference.

14–17. The Crown-Wheel Escapement. The crown-wheel escapement (Fig. 14–43) is used for causing a vibration in one axis by means of a rotation of another. The latter carries a crown wheel A, consisting of a circular band with an odd number of large teeth, like those of a splitting saw, cut on its upper edge. The vibrating axis, o, or *verge* as it is often called, is located just above the teeth of the crown wheel, in a plane at right angles to the vertical wheel axis. The verge carries two pallets, b and b_1, located in planes passing through its axis, the distance between them being arranged so that they may engage alternately with teeth on opposite sides of the wheel. If the crown wheel be made to revolve under the action of a spring or weight, the alternate action of the teeth on the pallets will cause a reciprocating motion in the verge. The rapidity of this vibration depends upon the inertia of the verge, which may be adjusted by attaching to it a suitably weighted arm.

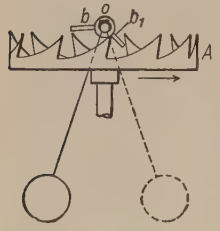

Fig. 14–43

This escapement, having the disadvantage of causing a recoil in the wheel as the vibrating arm cannot be suddenly stopped, is not used in timepieces, and but rarely in other places. It is of interest, however, as being the first contrivance used in a clock for measuring time.

14–18. The Anchor Escapement. The *anchor escapement* as applied in clocks is shown in Fig. 14–44. The escape wheel A_1 turns in the direction of the arrow and is supplied with long pointed teeth. The pallets are connected to the vibrating axis or verge C_1 by means of the arms d_1C_1 and e_1C_1, the axis of the verge and wheel being parallel to each other. The verge is supplied at its back end with an arm C_1p_1, carrying a pin p_1 at its lower end. This pin works in a slot in the pendulum rod, not shown. The resemblance of the two pallet arms combined with the upright arm to an anchor gave rise to the name "anchor escapement." The left-hand pallet, d_1, is so shaped that all the normals to its surface pass above the verge axis C_1, while all the normals to the right-hand pallet, e_1, pass below the axis C_1. Thus an upward

movement of either pallet will allow the wheel to turn in the direction of the arrow, or, the wheel turning in the direction of the arrow, will, when the tooth b_1 is in contact with the pallet d_1, cause a left-handed swing of the anchor; and when b_1 has passed off from d_1 and o_1 reaches the right-hand pallet, as shown, a right-handed swing will be given to the anchor. As the pendulum cannot be suddenly stopped after a tooth has escaped from a pallet, the tooth that strikes the other pallet

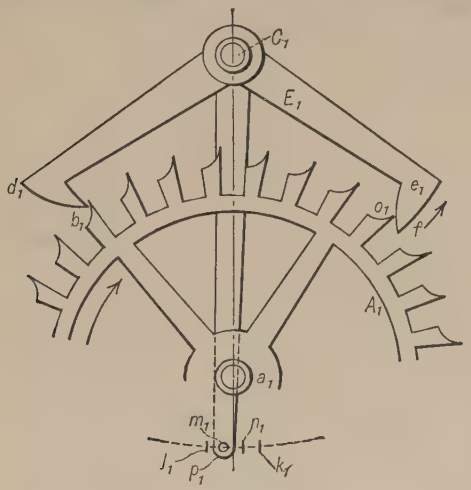

FIG. 14–44

is subject to a slight recoil before it can move in the proper direction, which motion begins when the pendulum commences its return swing. The action of the escape wheel on the pendulum is as follows:

Suppose the points l_1 and k_1 to show extreme positions of the point p_1, and suppose the pendulum and point p_1 to be moving to the left; the tooth b_1 has just escaped from the pallet d_1, and o_1 has impinged on e_1, as shown, the point p_1 having reached the position m_1. The recoil now begins, the pallet e_1 moving back the tooth o_1, while p_1 goes from m_1 to l_1. The pendulum then swings to the right and the pallet e_1 is urged upward by the tooth o_1, thus urging the pendulum to the right while p_1 passes from l_1 to n_1, when o_1 escapes. Recoil then occurs on the pallet d_1 from n_1 to k_1, and from k_1 to m_1 an impulse is given to the pendulum to the left, when the above-described cycle will be repeated. As the space through which the pendulum is urged on exceeds that through which it is held back, the action of the escape wheel keeps the pendulum vibrating. This alternate action *with* and *against* the pendulum prevents it from being, as it should be, the sole regulator of the

speed of revolution of the escape wheel, for its own time of vibration, instead of depending only upon its length, depends also upon the force urging the escape wheel round. Therefore any change in the maintaining force will disturb the rate of the clock.

14–19. Dead-Beat Escapement. The objectionable feature of the anchor escapement is removed in Graham's *dead-beat* escapement, shown in Fig. 14–45. The improvement consists in making the outline of the lower surface, *db*, of the left-hand pallet; and the upper surface of the right-hand pallet, arcs of a circle about *C*, the verge axis; the

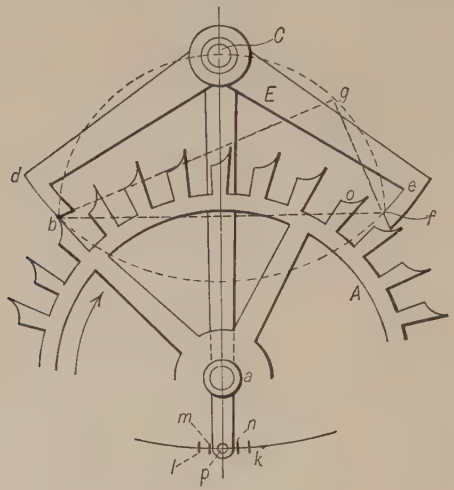

Fig. 14–45

oblique surfaces *b* and *f* complete the pallets. The construction indicated by dotted lines in the figure insures that the oblique surfaces of the pallets shall make equal angles, in their normal position, with the tangents *bC* and *fC* to the wheel circle not shown. If we suppose the limits of the swing of the point *p* to be *l* and *k*, the action of the escape-wheel on the pendulum is as follows:

The pendulum being in its right extreme position, the tooth *b* is bearing against the circular portion of the pallet *d*; as the pendulum swings to the left under the action of gravity, the tooth *b* will begin to move along the inclined face of the pallet when the center line has reached *n*, and will urge the pendulum onward to *m*, where the tooth leaves the pallet, and another tooth *o* comes in contact with the circular part of the pallet *e*, which, with the exception of a slight friction between it and the point of the tooth, will leave the pendulum free to move onward, the wheel being locked in position. On the return

swing of the pendulum, the inclined part of the pallet *e* urges the pendulum from *m* to *n*. Hence there is no recoil, and the only action against the pendulum is the very minute friction between the teeth and the pallets. The impulse is here given through an arc *mn*, very nearly bisected by the middle point of the swing of the pendulum, which is also an advantage. The term " dead-beat " has been applied because the second hand, which is fitted to the escape wheel, stops so completely when the tooth falls upon the circular portion of a pallet, there being no recoil or subsequent trembling such as occurs in other escapements.

In watches the pendulum is replaced by a balance wheel swinging backward and forward on an arbor under the action of a very light coiled spring, often called a " hair spring "; the pivots of the arbor are very nicely made, so that they turn with very slight friction.

14–20. The Graham Cylinder Escapement. This form of escapement is used in the Geneva watches. Here the balance verge *o* (Figs. 14–46 and 14–47) has attached to it a very thin cylindrical shell *rs* centered at *o*, the axis of the verge, and the point of the tooth *b* can rest either on the outside or inside of the cylinder during a part of the swing of the balance. As the cylinder turns in the direction of the arrow (Fig. 14–46), the wheel also being urged in the direction of its arrow, the inclined surface of the tooth *bc* comes under the edge *s* of the cylinder, and thus urges the balance onward; this gives one impulse, as shown in Fig. 14–47. The tooth then passes *s*, flies into the cylinder, and is stopped by the concave surface near *r*. In the opposite swing of the balance the tooth escapes from the cylinder, the inclined surface pushing *r* upward, which gives the other impulse in the opposite direction to the first; the action is then repeated by the next tooth of the wheel.

Fig. 14–46

Fig. 14–47

This escapement is, in its action, nearly identical to the *dead beat*; but the impulse is here given through small equal arcs, situated at equal distances from the middle point of the swing.

14–21. The Chronometer Escapement is shown in Fig. 14–48. Here the verge *o* carries two circular plates, one of which carries a projection *p*, which serves to operate the detent *d*; the other carries a projection *n*, which swings freely by the teeth of the escape wheel when a tooth is resting upon the pallet *d*, but encounters a tooth when the wheel is in any other position.

The detent *d* has a compound construction and consists of four parts:

1. The locking stone *d*, a piece of ruby on which the tooth of the escape wheel rests.

2. The discharging spring l, a very fine strip of hammered gold.

3. A spring s on which the detent swings, and which attaches the whole to the frame of the chronometer.

4. A support e, attached to the body of the detent, to prevent the strip l from bending upward.

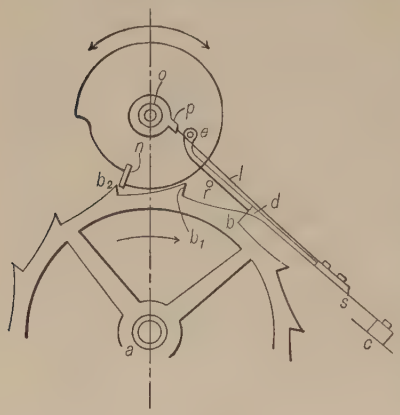

Fig. 14–48

A pin r prevents the detent from approaching too near the wheel.

The action of the escapement is as follows: On a right-hand swing of the balance the projection p meets the light strip l, which, bending from its point of attachment to the detent, offers but very little resistance to the balance. On the return swing of the balance, the projection p meets the strip l, which can now only bend from e, and raises the detent d from its support r, thus allowing the tooth b to escape, the escape wheel being urged in the direction of the arrow. While this is occurring, the tooth b_2 encounters the projection n, and gives an impulse to the balance; the detent meanwhile has dropped back under the influence of the spring s, and catches the next tooth of the wheel b_1.

It will be noticed that the impulse is given to the balance immediately after it has been subject to the resistance of unlocking the detent d, thus immediately compensating this resistance; also that the impulse is given at every alternate swing of the balance.

PROBLEMS

XIV–1. Find W if there is a friction loss of 40 per cent.

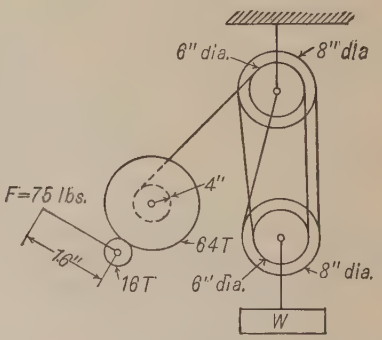

Prob. XIV–1

XIV–2. In this hitch, what force F is required to raise a weight W of 1400 lb, friction being neglected?

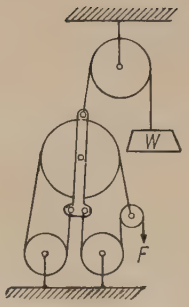

PROB. XIV–2

XIV–3. If $W = 3000$ lb, find the force F.

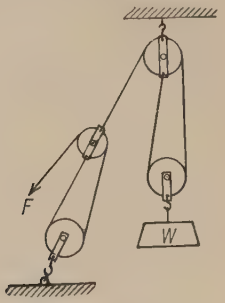

PROB. XIV–3

XIV–4. Two men, weighing 150 lb each, stand on W and pull just enough to sustain the load.

(*a*) What pull do they exert on the rope?

(*b*) What is the tension on the support for the upper block, neglecting the weight of the blocks and rope itself?

(*c*) If the men stood on the ground what would be the tension in the rope which supports the upper block?

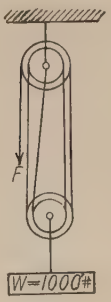

PROB. XIV–4

XIV–5. A differential pulley block is to lift 1500 lb with a pull of 30 lb, friction being neglected. Find the ratio of the larger diameter of the upper sheave to the smaller one.

XIV–6. In a differential pulley block, the smaller diameter of the upper sheave is 12 in. It is found necessary to haul over 7 ft of chain to raise the weight 6 in. What is the other diameter of the upper sheave? Neglecting friction, what weight would be raised by a pull of 40 lb?

XIV–7. With a differential pulley block, if the diameters of the sheaves in the fixed block are 12 in. and 11 in., and if the weight of the lower block is 20 lb, what net weight can be raised by a pull of 120 lb on the chain, allowing a loss of 30 per cent in friction? How much chain must be overhauled to lift the weight 1 ft?

INDEX

A

Acceleration, 71
  angular, 16, 75
  instantaneous axis of, 78
  linear, 15, 75
  normal, 15, 71
  of a point, 71
  of a rolling body, 83
  on a sliding pair, 84
  relative, 73
  tangential, 15, 71
  variable, 21
  vector image, 77
  vectors, 71, 75
Acme thread, 307
Action, angle of, 146, 179
  arc of, 180
Addendum, 178
  circle, 178
  distance, 178
  limits of, on involute gears, 192
Aggregate combinations, 361
  motion, 361
Anchor escapement, 386
Angle of action, 146
  of approach, 179
  of obliquity, 146
  of recess, 180
  pressure, 146
Angular acceleration, 16, 75
  speed, 15, 17
  speed, sliding contact, 142
Angular speed ratio, constant, 145, 148
Annular gears, cycloidal, 206
  limitations of, 206
Annular wheels, 197
Approach, angle of, 179
  arc of, 180
Arc of contact, 190
Automobile differential, 252
  steering mechanism, 99
  transmission, 237
Axial pitch, 218
Axis, instantaneous of acceleration, 78
  instantaneous of velocities, 44
  relative instantaneous, 52

B

Backlash, 178
Bands, 3, 322
Barrel, for cord drive, 349
Bearings, 6
Bell crank lever, 7
Belts, 322
  crossed, 324
  design of drives, 339
  directional relation of, 323
  double, 325
  effective pull of, 326
  effective radius of, 323
  horsepower of, 326
  length of, 328
  line of connection of, 322
  non-parallel shafts, 337
  open, 324
  pitch surface of, 322
  power of, 325
  quarter-turn, 338
  reversible direction, 339
  single, 325
  speed ratio, 323
  tension in, 325
  types of, 324
  V, 344
Bevel gear differential, 252
Bevel gears, 211
  internal, 215
  skew, 215
  teeth of, 213
  to draw blanks of, 212
  to draw teeth of, 214
  trains, epicyclic, 250
  Tredgold's approximation for, 214
  twisted, 215

Blocks, pulley, 362
Body, rigid, 2
Bush, 6

C

Cam, 267
  acceleration of follower, 292
  cylindrical, 267, 285
  diagrams, 268
  eccentric, 283
  flat follower, 280
  flat rocker, 282
  harmonic motion, 269
  multiple-turn, 288
  on lever, 291
  plate, 267, 271
  positive motion, 279
  triangular, 284
  velocity of follower, 292
Cam combinations, 291
Catch, 368
  friction, 374
Centro, 52
Centrode, 93
Chains, 322, 350
  angular speed ratio, 355
  block, 352
  conveyor, 350
  hoisting, 350
  inverted tooth, 356
  length of, 354
  Morse, 357
  power transmission, 352
  Renold, 356
  roller, 352
  silent, 356
Chronometer escapement, 389
Chuck, elliptic, 122
Circular pitch, 178, 190
Clearance of gears, 178
Clearing curve, 184
Click, 368
  double-acting, 372
  reversible, 370
Clockwork, 235
Closed pair, 3
Collar, 6
Combinations, aggregate, 361
Components, 34
  total, 37
  vectors, 34
Compound screws, 311
Cone of gears, 239
Cones, speed, 337
Conic four-bar linkage, 128
Conjugate curves, 182
  to draw, 146
Conjugate teeth, construction of, 182
Connectors, flexible, 322
Constant angular speed ratio, 145, 148
Constant speed, 29
Contact, arc of, 190
  path of, 190
  rolling, 148
  sliding, 142, 145
  types of, 142
Continuous motion, 13
Conveyor chains, 350
Coplanar motion, 14
Cord drives, 348
Cords, 322, 345
  parallel motion, 366
Coriolis' Law, 87
Cotton card train, 236
Counter mechanism, 378, 382
Coupling, Oldham's, 122
Crank, 7
  action of, 8
  and rocker, 94
Crown-wheel escapement, 386
Crown gears, 215
Crowning of pulleys, 343
Curvilinear translation, 16, 58
Cycle of motion, 14
Cycloidal gears, 202
  annular, 206
  interchangeable, 204
  to draw teeth of, 205
Cycloidal pinions, 206
Cylinder, accelerations on, 83
Cylindrical cams, 267, 285
  multiple turn, 288
  on lever, 291

D

Dead-beat escapement, 388
Dead points, 92
Dedendum, 178
Detent, 368
Diametral pitch, 179
Differential, bevel gear, 252

Differential pulley block, 364
screws, 311
Differentiation, graphical, 23
Direction, 13
Disk and roller, 161
Double epicyclic train, 254
Drag link, 95
Driver, 3
Drum, for cord drive, 349

E

Eccentric, 114
as a cam, 283
rod, 114
strap, 114
Eccentricity, 114
Elementary combination, 2
Elements, pairs of, 3
Ellipses, rolling, 166
Elliptic chuck, 122
trammel, 119
Epicyclic trains, 243, 250
bevel, 250
double bevel, 254
reverted, 246
Epitrochoid, 184
Escapement, 385
anchor, 386
chronometer, 389
crown-wheel, 386
dead-beat, 388
Graham cylinder, 389
External spur gears, 176

F

Face, of gear, 178
of tooth, 178
Feather and groove, 7
Flank, acting, 178
of tooth, 178
Flexible connectors, 322
Follower, 3
Foot-pound, 325
Four-bar linkage, 8, 90
accelerations on, 81
angular speed of links, 50
angular speed ratio of links, 92
conic, 128
Four-bar linkage, crank and rocker, 94
dead points of, 92
drag link, 95
equal crank, 98
non-parallel crank, 97
parallel crank, 96
parallel motion, 96
relative motion of links, 92
sliding pair, 101
slow motion by, 100
with a sliding member, 10
Frame, 2
Friction catch, 374
Friction gearing, 161
grooved, 162

G

Gear drives, 175
Gear teeth, shape of, 181
sliding of, 226
Gear trains, design of, 241
reverted, 234
Gears, application of involute to, 186
backlash of, 178
bevel, 211
clearance of, 178
cone, 239
crown, 215
cutting of, 208
cycloidal, 202
face of, 178
helical, 209, 218
herringbone, 209
hyperboloidal, 215
hypoid, 215
interchangeable, 204
interchangeability of, 199
obliquity of, 181
path of contact of, 181
pin, 210
pressure angle of, 181
proportions of standard teeth, 202
screw, 215
separation of, 199
shape of teeth, 181
speed ratio, 176
spur, 176, 221
to draw teeth of, 183
twisted, 209

Gearing, classification of, 175
friction, 161
grooved friction, 162
Geneva stop, 381
wheel, 381
Governor, water-wheel, 253
Graham cylinder escapement, 389
Graphical differentiation, 23
integration, 25
methods of solving problems, 22
Gudgeon, 6
Guides, 6

H

Harmonic motion, 27
cam for, 269
equations for, 28
Helical gears, 209, 218
Helix, 218
Herringbone gears, 209
Higher pair, 4
Hoisting blocks, 362
chains, 350
machine trains, 236
Hooke's joint, 128
angular acceleration of, 133
angular speed ratio of, 131
double, 133
relative angular motion of, 129
Horsepower, 325
Hyperbolas, rolling of, 167
Hyperboloidal gears, 215
Hyperboloids, rolling, 167
Hypoid gears, 215

I

Idle wheel, 232
Image, 53
acceleration vector, 77
link, 54
velocity vector, 47
Inclined plane and wedge, 304
Incomplete pair, 4
Instantaneous axis, of velocities, 44
of accelerations, 78
Instantaneous center, 44
Integration, graphical, 25
Interchangeable gears, 199, 204
Intermittent motion, 14
from continuous motion, 380
from reciprocating motion, 367
Internal bevel gears, 215
Inversion of pairs, 5
Involute of a circle, 184
Involute gears, 186
separation of, 199
standard proportions of, 202
to draw the teeth of, 187
Isosceles linkage, 117

J

Journal, 6

K

Keys, 6
Keyway, 7
Kinematic chain, 90
Kinematics of machines, 1

L

Lead, 218
of screw, 308
Left-handed rotation, 14
Lever, 7
bell crank, 7
Line of connection, 42
for belting, 322
Linear acceleration, 15, 75
Linear speed, 14
of a point on a revolving body, 18
Links, 3, 9, 90
image, 54
phorograph, 54
shape and size of, 114
Linkage, 90
(see also " Four-bar linkage ")
isosceles, 117
more than four links, 55
rocking block, 106
sliding block, 102
sliding slot, 105
slow motion by, 100
swinging block, 106
turning block, 113
two sliding pairs, 115
Linkwork (see " Four-bar linkage ")
Locking devices, 384
Logarithmic spirals, 164
Lower pair, 3

M

Machines, 2
  kinematics of, 1
Masked wheels, 377
Mechanism, 2
  constructive, 1
  pure, 1
  science of, 1
  straight-line, 123, 126
Morse chain, 357
Motion, 13
  about two axes, 63
  aggregate, 361
  classification of, 19
  constant acceleration, 20
  continuous, 13
  coplanar, 14
  cycle of, 14
  formulas of, 22
  intermittent, 14, 367, 380
  period of, 14
  periodic center of, 47
  reciprocating, 13
  sense of, 151
  simple harmonic, 27
  uniform, 19
  uniformly varying, 20
Multiple threads, 307

N

Neck, 6
Nipping lever, 375
Normal acceleration, 15, 71
Normal pitch, of helical gear, 218
  of involute gear, 189
  relation to circular pitch, 190
Nut, 306

O

Obliquity, angle of, 146, 181
Oldham's coupling, 122
Origin of vector, 33
Oscillation, 14

P

Pair, closed, 3
  higher, 4
  incomplete, 4
Pair, inversion of, 5
  lower, 3
  sliding, 59
Pairs of elements, 3
Pantograph, 126
Parabolas, rolling of, 167
Parallel motion, 127, 366
Particle, 1
Path, 13
  of contact, 181, 190
Pawl, 368
  reversible, 370
Peaucellier's straight-line mechanism, 126
Pedestal, 6
Period of motion, 14
Periodic center of motion, 47
Periphery speed, 18
Phorograph, 53
  link, 54
Pillow-block, 6
Pin gearing, 210
Pinion, 176, 197
  and rack, 195
  cycloidal, 206
Pitch, axial, 218
  circle, 177
  circular, 178, 190
  diametral, 179
  normal, 189, 218
  of screw, 308
  point, 146, 177
  surface, of belts, 322
Pivot, 6
Plane, inclined, 304
Plate cam, 267, 271
  positive motion, 279
  with flat follower, 280
  with flat rocker, 282
Plumber-block, 6
Point, 1
  acceleration of, 71
Polygon vector, 34
Positive motion cams, 279
Pressure angle, 146, 181
Pulley blocks, 362
  differential, 364
Pulleys, crowning of, 343
  stepped, 330
  tight and loose, 344

Q

Quick-return, 107

R

Rack, 195
  and pinion, 224
  velocity of, 227
Radian, 17
Ratchet wheel, 368
Recess, angle of, 180
  arc of, 180
Reciprocating motion, 13
Rectilinear translation, 16
Reeves variable-speed transmission, 345
Relative acceleration, 73
Relative motion, 151
Renold silent chain, 357
Resolution of velocity by vectors, 36
Resultant, 34
  vector, 34
Reverted epicyclic trains, 246
  gear trains, 234
Revolution, 14
  axis of, 14
  direction of, 14
  plane of, 14
  sense of, 14
Rigid body, 2
Right-handed rotation, 14
Robert's straight-line mechanism, 124
Rocker, 8
Rocking block linkage, 106
Roller and disk, 161
Rolling, 154
  circular cylinder on fixed surface, 56
  circular cylinder on moving surface, 57
  circular cylinder on turning cylinder, 58
  of equal ellipses, 166
  of equal hyperbolas, 167
  of equal parabolas, 167
  of logarithmic spirals, 164
  of non-circular surfaces, 163
Rolling body, accelerations on, 83
Rolling cones, 156
  speed ratio of, 156
Rolling contact, 56, 148
Rolling cylinder, and sphere, 159
  external contact, 154
  internal contact, 155
Rolling cylinders, relative speeds of, 155
Rolling hyperboloids, 167
Root circle, 178
  distance, 178
Ropes, 345
  grooves for, 348
  wire, 349
Rope drives, 346
  American system, 346
  continuous, 346
  English system, 346
  multiple rope system, 346
Rotation, 14
  axis of, 14
  continuous, 148
  direction of, 14
  plane of, 14
  sense of, 14

S

Sang's theory, 208
Scalar quantity, 33
Scotch yoke, 116
Scott Russell's straight-line mechanism, 123
Screws, 306
  compound, 311
  cutting of, 312
  differential, 311
  gearing, 215
  lead of, 308
  pitch of, 308
  power of, 311
  rotation by axial pressure, 312
  speed of, 309
  threads, 305
  threads, forms of, 306
  velocity of, 311
Selective direction of trains, 239
Selective speed drives, 237
Sense, 13
  of relative motion, 151
Silent feed, 377
Simple harmonic motion, 27
  equations for, 28
Skew bevel gears, 215
Slides, 6

Sliding, of gear teeth, 226
Sliding block linkage, 102
Sliding contact, 142, 145
  angular speed ratio, 142, 145
Sliding pairs, 59, 101
  accelerations in, 84
  two, 115
Sliding slot linkage, 105
Slow motion, 100
Space diagram, 34
Speed, angular, 15, 17
  constant, 29
  linear, 14
  periphery, 18
  surface, 18
  uniform, 15
  variable, 15, 29
Speed cones, 337
Speed ratio, constant, 145
  for belts, 323
Speed transmission, variable, 344
Spindle, 6
Spirals, logarithmic, 164
Spline, 7
Spur gears, 176, 221
  twisted, 209
Square thread, 307
Star wheel, 383
Step, 6
Stepped pulleys, 330
  equal, 335
  for crossed belt, 331
  for open belt, 333
Steering mechanism, automobile, 99
Stepped wheels, 209
Straight-line mechanism, 123, 126
  Peaucellier's, 126
  Robert's, 124
  Scott Russell's, 123
  Tchebicheff's, 124
  Watt's, 124
Subtraction of vectors, 36
Swash plate, 366
Swinging block linkage, 106
Swinging block, quick-return mechanism, 107

T

Tangential acceleration, 15, 71
Tchebicheff's straight-line mechanism, 124
Teeth, sliding of, 226
Terminus, of a vector, 33
Thread, acme, 307
  forms of, 306
  left-hand, 309
  multiple, 307
  right-hand, 309
  screw, 305
  square, 307
  V, 307
Tooth, face of, 178
  flank of, 178
  length of, 178
Tooth, of bevel gears, 213
  shape of, 181
Total component, 37
Train, cotton card, 236
  design of, 241
  double epicyclic, 254
  epicyclic, 243, 250
  hoisting machine, 236
  of wheels, 231
  reverted, 234, 246
  selective direction, 239
  value, 232
Trammel, elliptic, 119
Translation, 16
  curvilinear, 16, 58
  rectilinear, 16
Transmission, automobile, 237
  modes of, 3
  variable speed, 344
Tredgold's approximation, 214
Turning block linkage, 113
Turning bodies, 16
Twisted bevel gears, 215
  spur gears, 209

U

Uniform motion, 19
  speed, 15
Universal joint, 134

V

V belts, 344
V thread, 307
Variable acceleration, 21
  speed, 15, 29
  speed transmission, 344

Vectors, 33
acceleration, 71, 75
addition of, 34
components of, 34, 37
laws for, 34
origin of, 33
polygon, 34
position of, 34
resolution of, 36
resultants, 34
subtraction of, 36
terminus of, 33
total components of, 37
relative velocity by, 41
velocity image, 47
Vector image, acceleration, 77
Velocities, 15, 41, 48
instantaneous axis of, 44
of a rack, 227
of screws, 311
Velocities,
points of identical, 53
relative, 41

W

Water-wheel governor, 253
Watt's straight-line mechanism, 124
Wedge, 304
Weston pulley block, 364
Wheel, and worm, 316
Wheels, idle, 232
stepped, 209
train of, 231
Whitworth quick-return, 113
Wiper, 267
Wire ropes, 349
Worm and wheel, 223, 316
Wrench, speed of, 309

GOVERNMENT PROPERTY
NOT TO BE APPROPRIATED TO PRIVATE
REVISED STATUTES SEC. 5439, March 4,
UNIVERSITY OF MICHIGAN
NAVAL TRAINING UNIT

4-3-4 c
4-5 ABCD

GOVERNMENT PROPERTY
NOT TO BE APPROPRIATED TO PRIVATE USE
REVISED STATUTES SEC. 5439, March 4, ---
UNIVERSITY OF MICHIGAN
NAVAL TRAINING UNIT